PAX

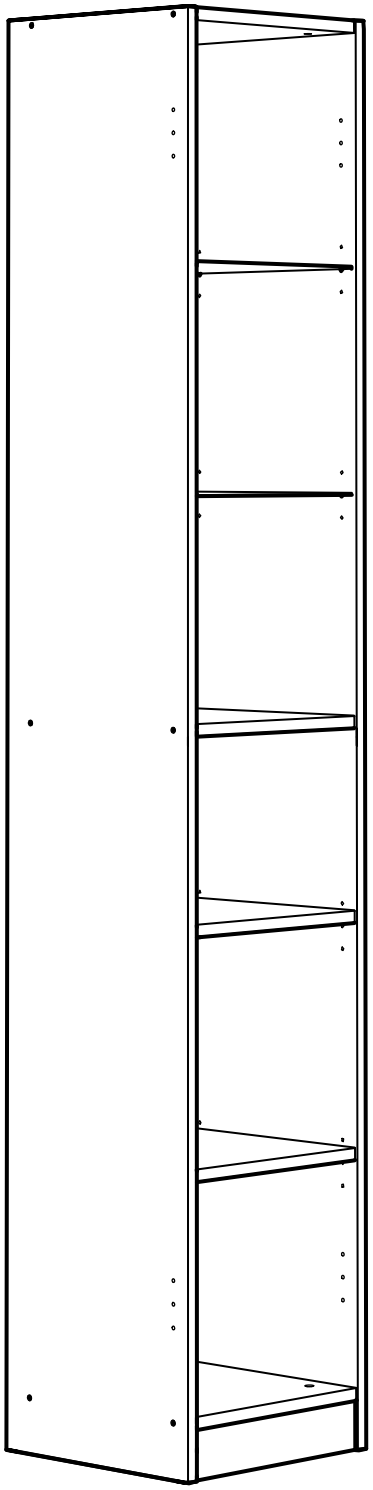

Design and Quality
IKEA of Sweden

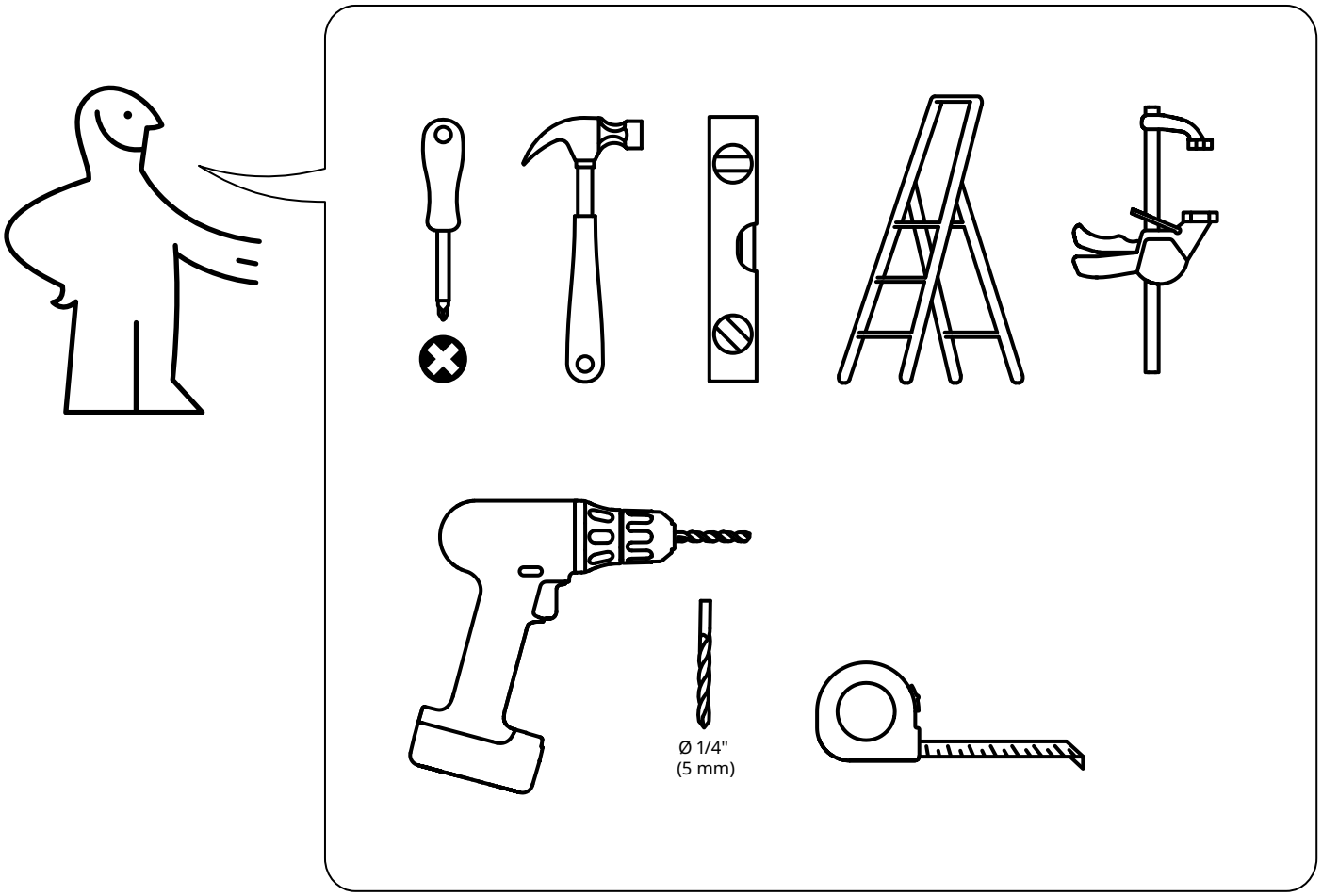
Ø 1/4"
(5 mm)

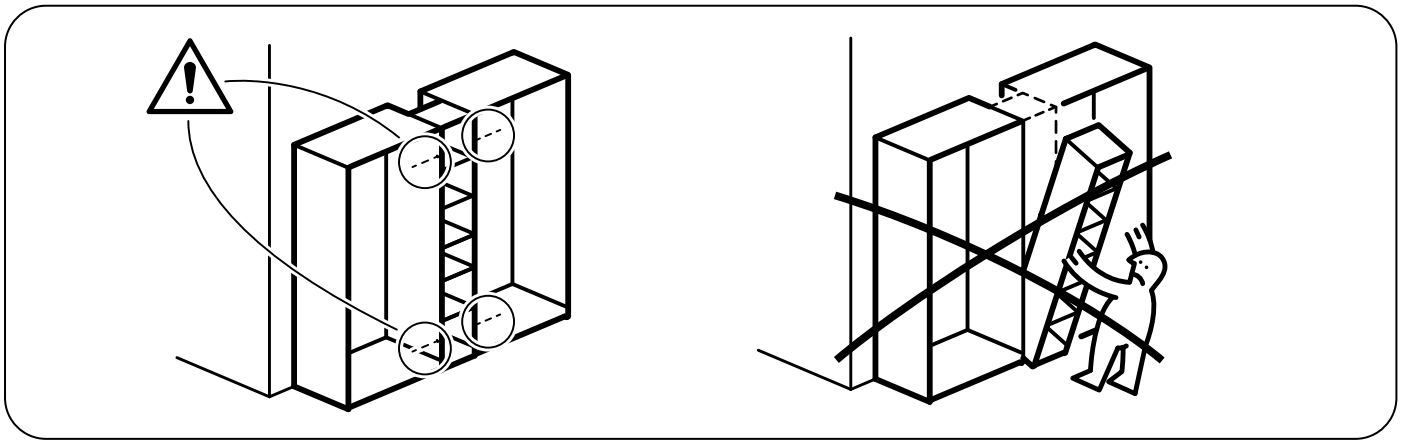

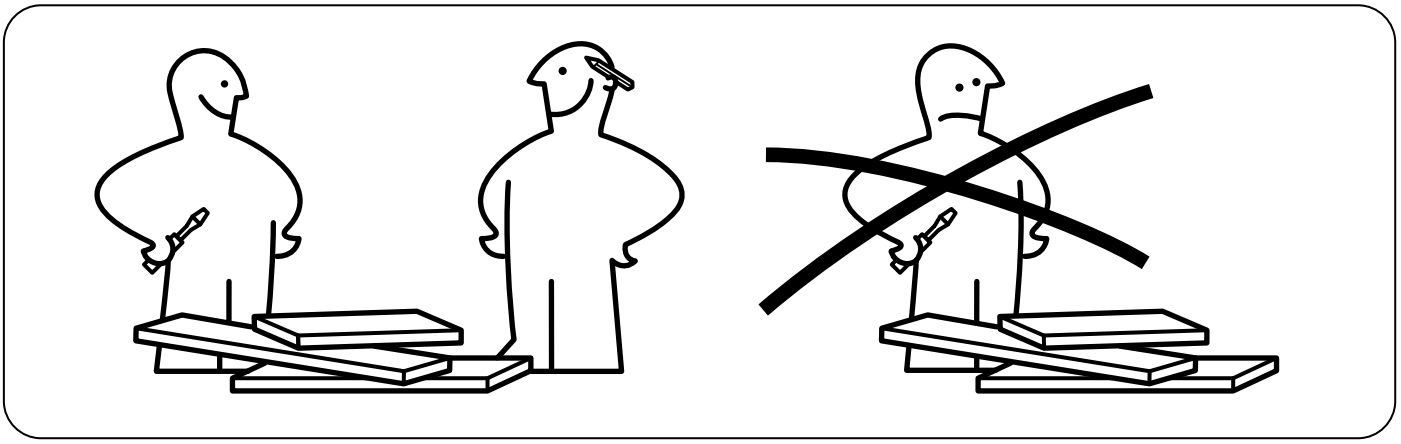

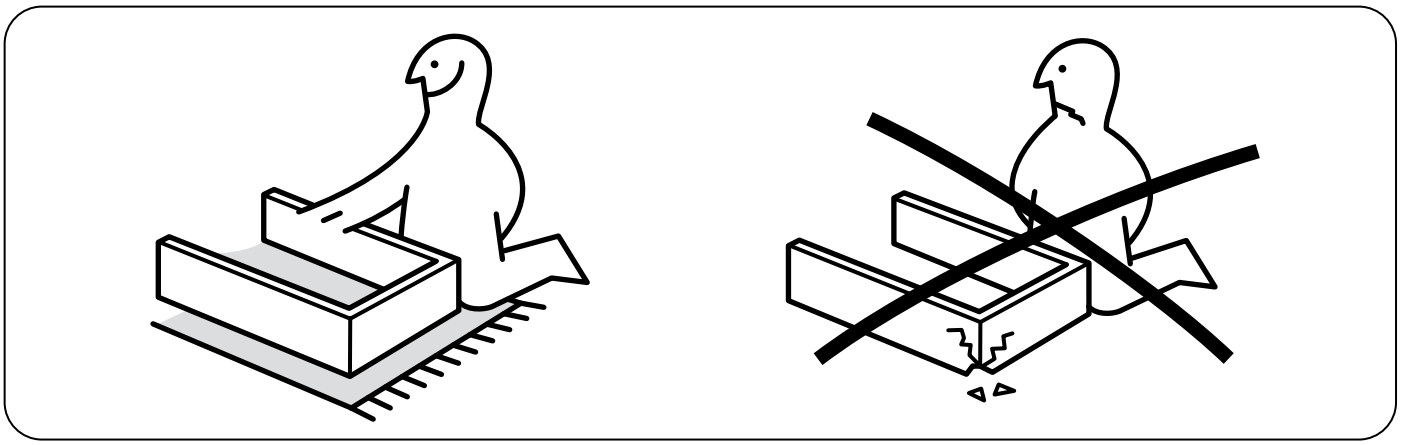

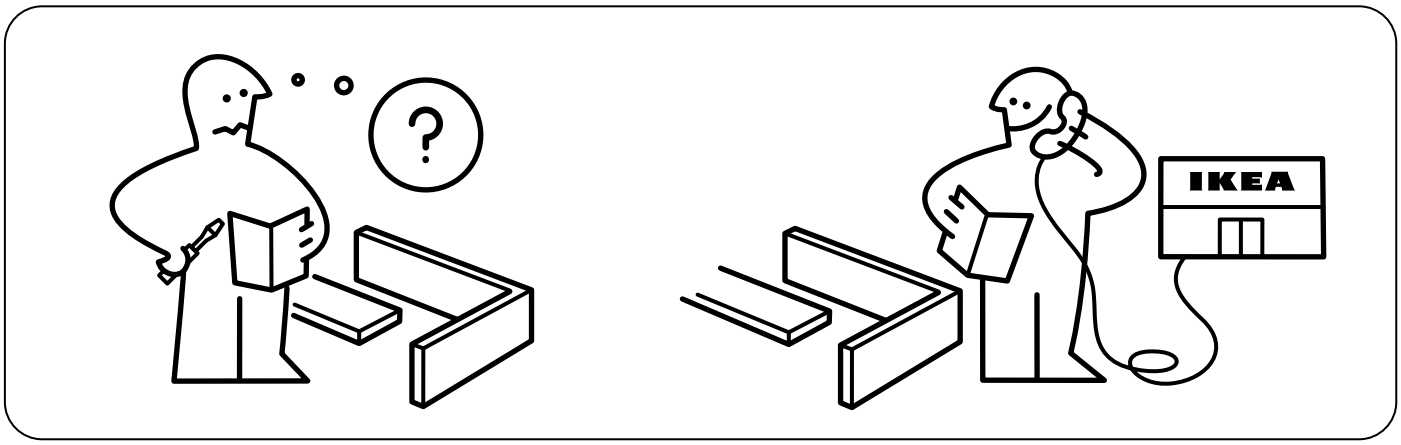
?
IKEA

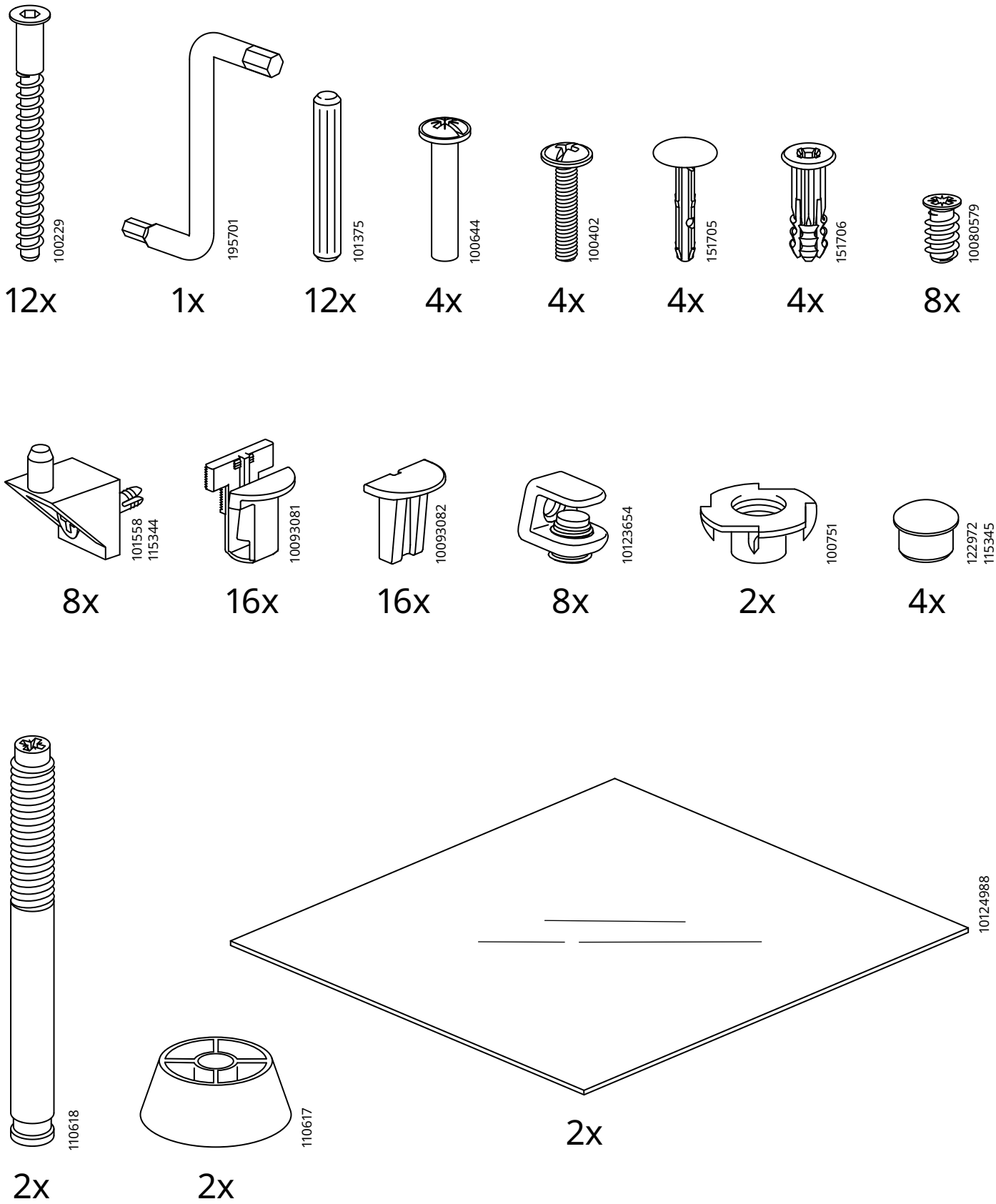
100229
12x
195701
1x
101375
12x
100644
4x
100402
4x
151705
4x
151706
4x
10080579
8x
101558
115344
8x
10093081
16x
10093082
16x
10123654
8x
100751
2x
122972
115345
4x
110618
2x
110617
2x
10124988
2x

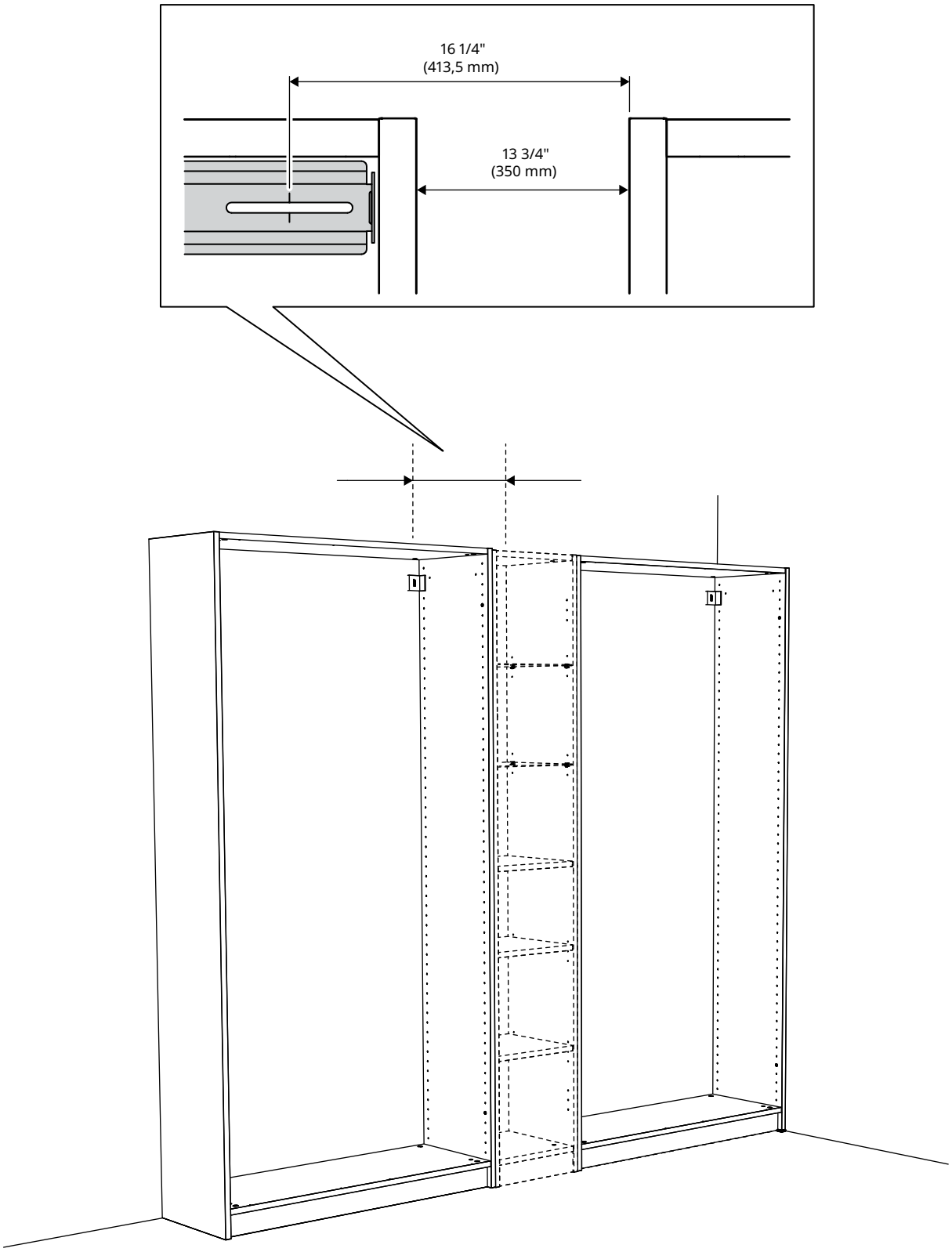
16 1/4"
(413,5 mm)
13 3/4"
(350 mm)

1

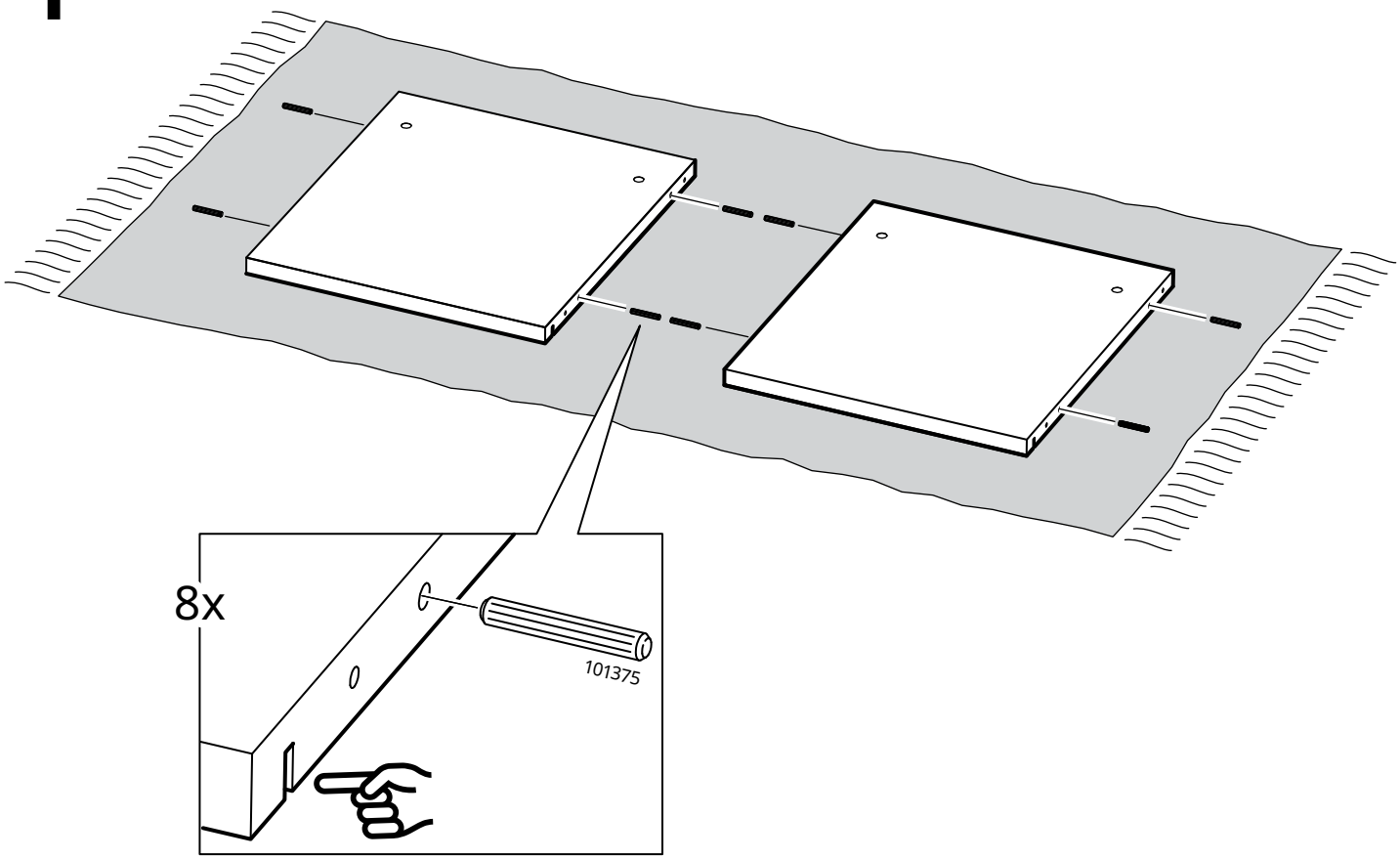

2

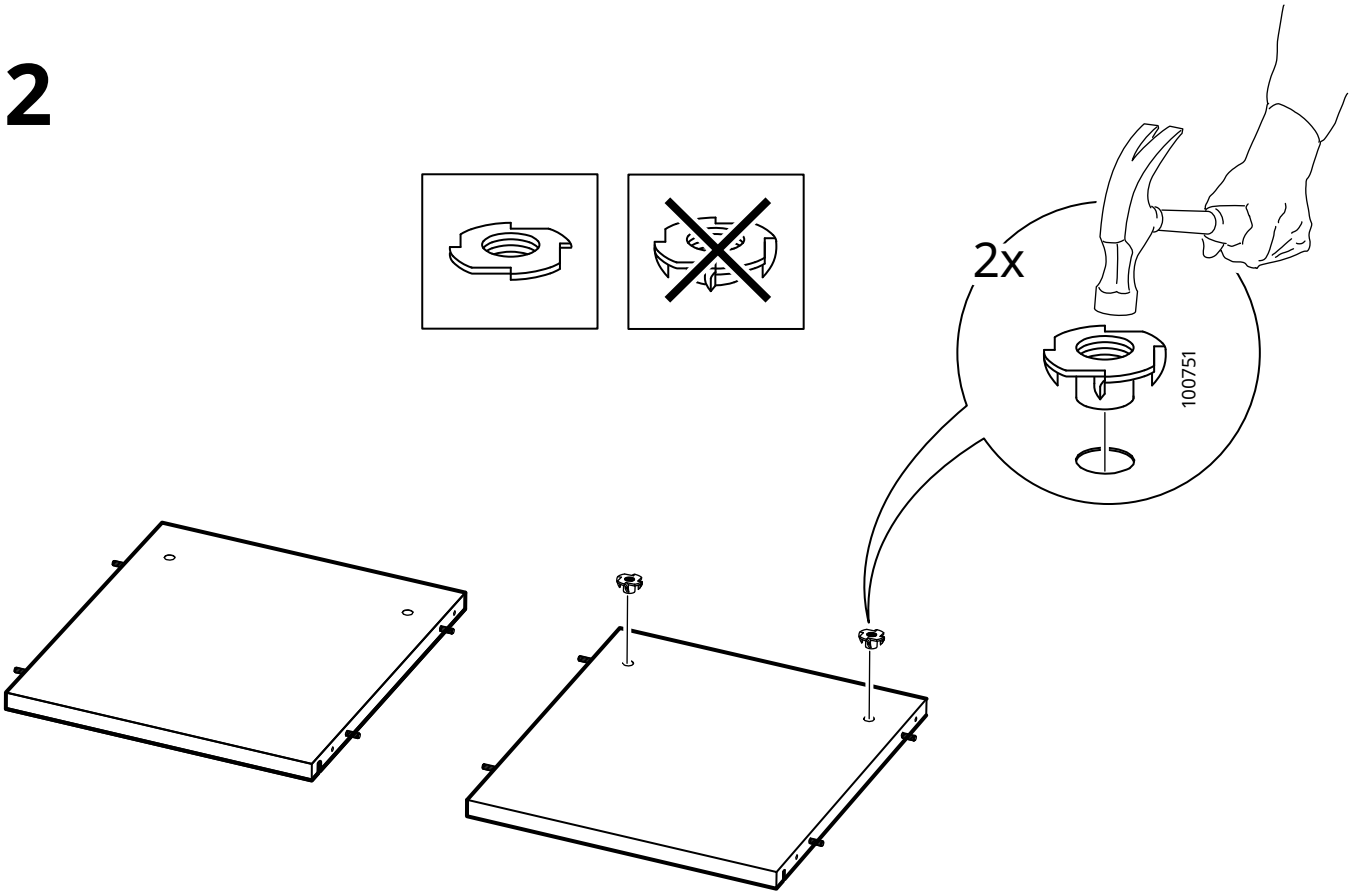

3

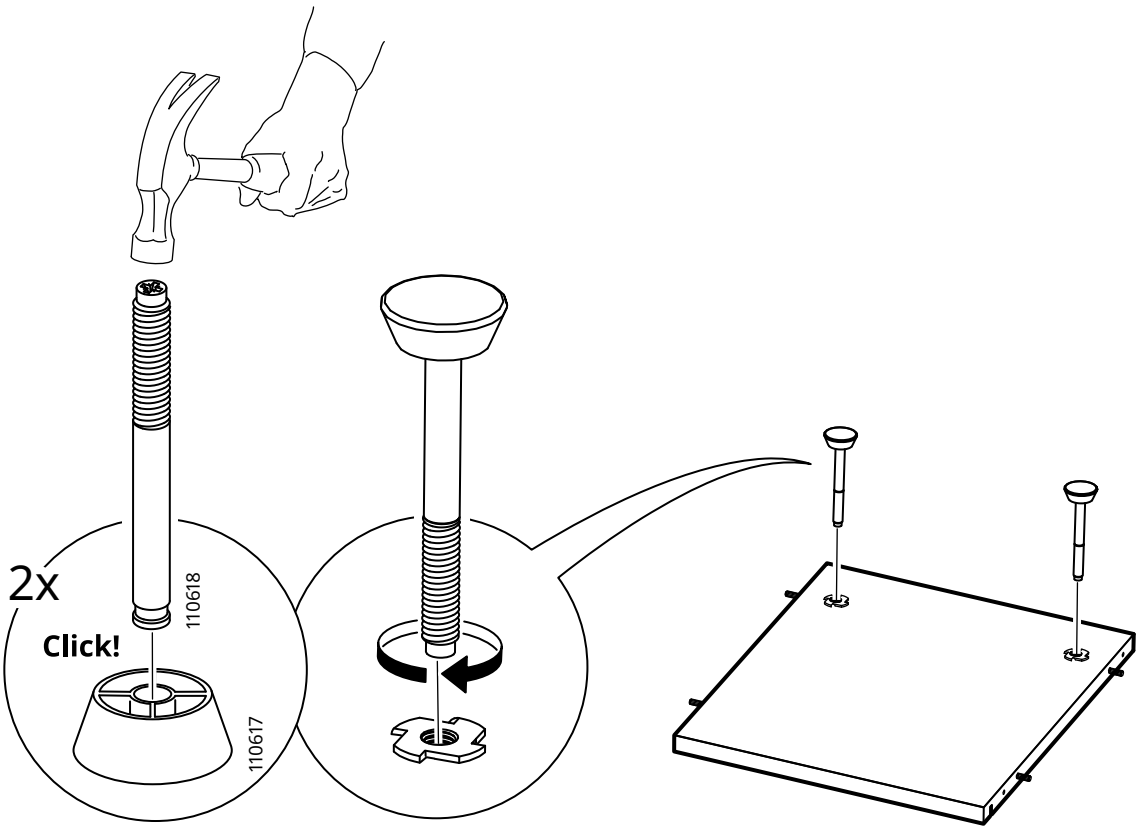

4

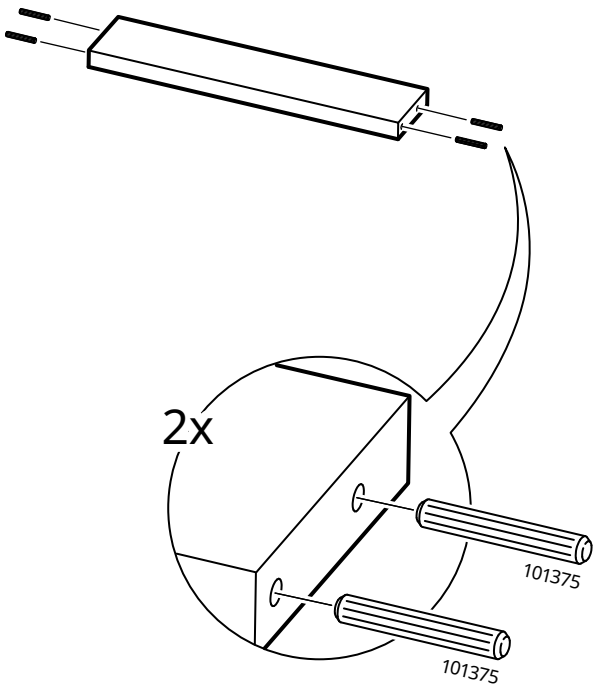

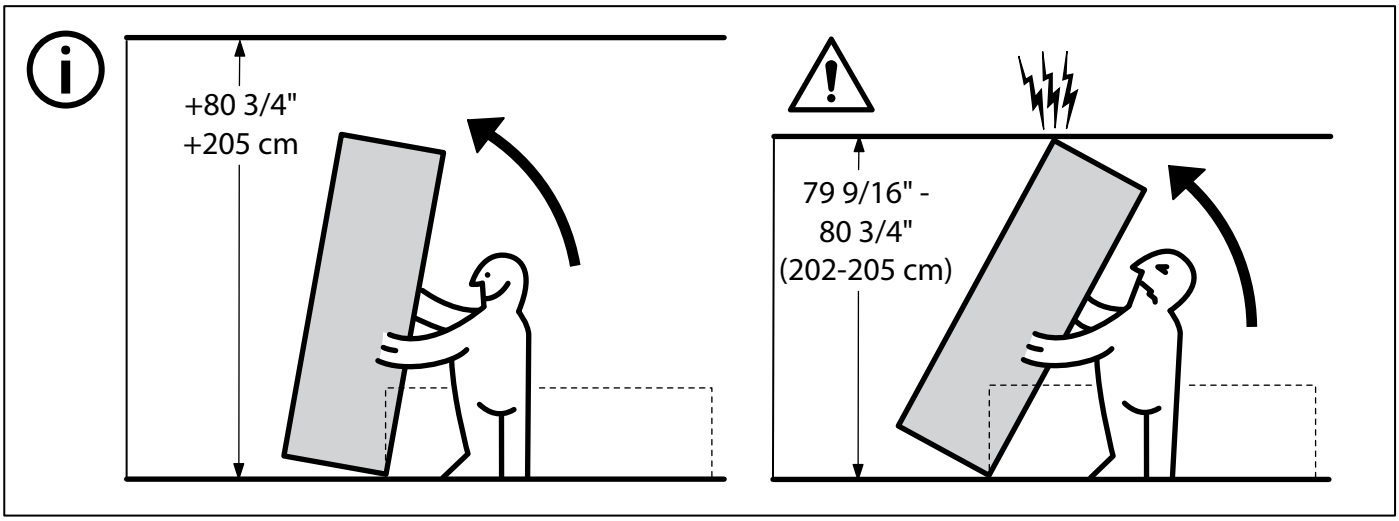
+80 3/4"
+205 cm
79 9/16" -
80 3/4"
(202-205 cm)

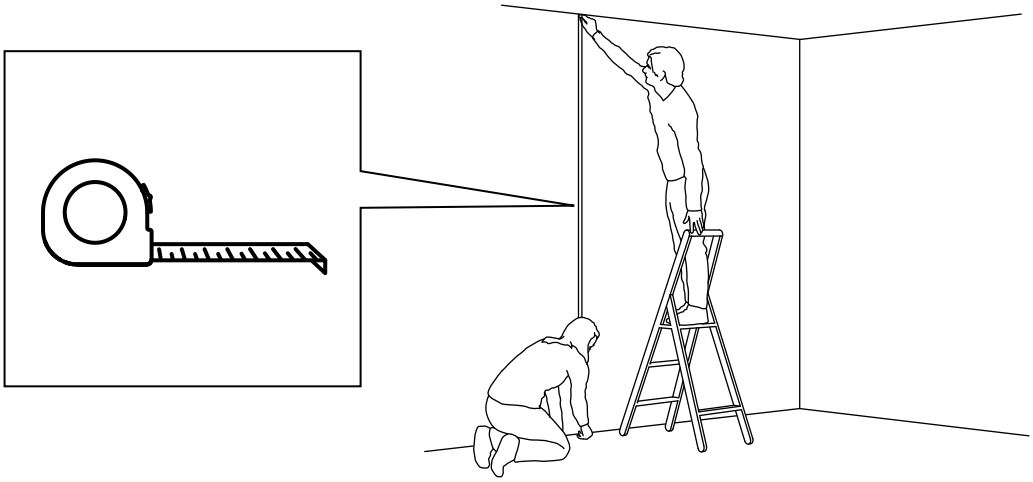

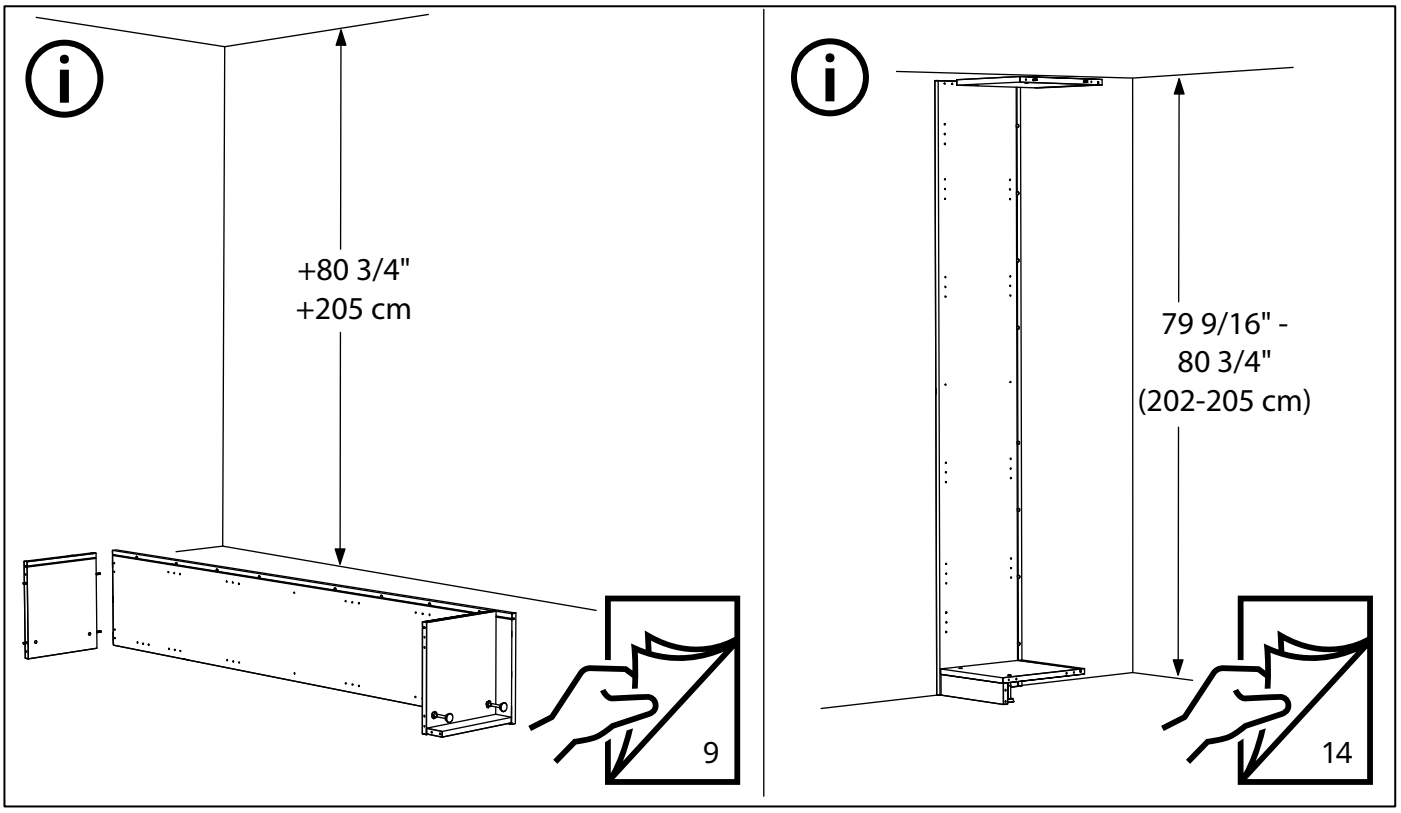
+80 3/4"
+205 cm
9
79 9/16" -
80 3/4"
(202-205 cm)
14

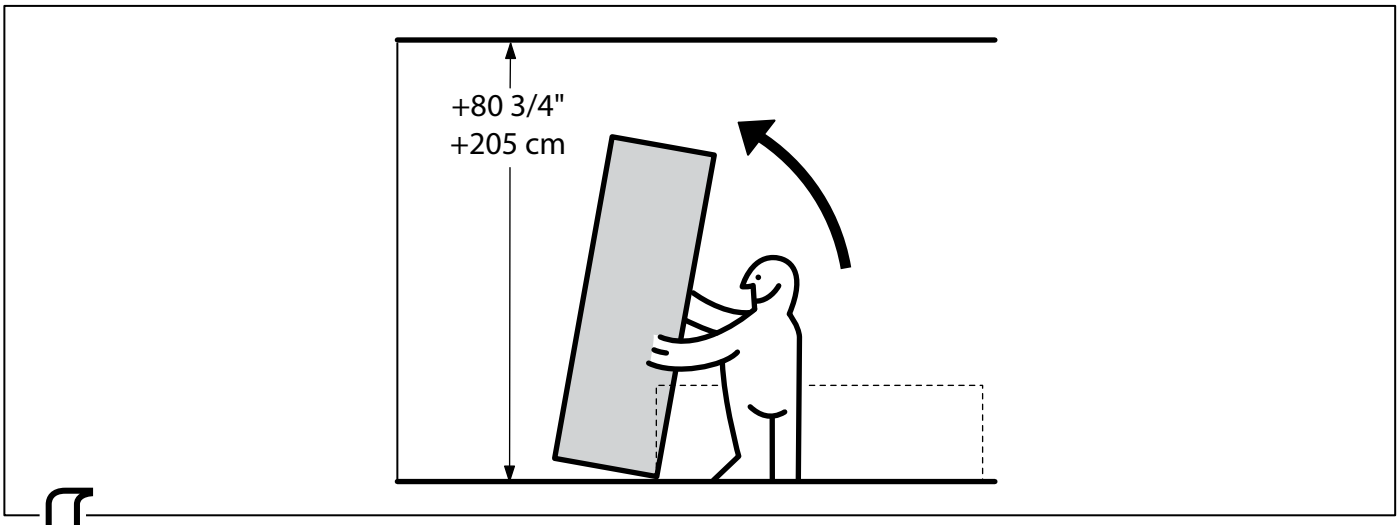

5

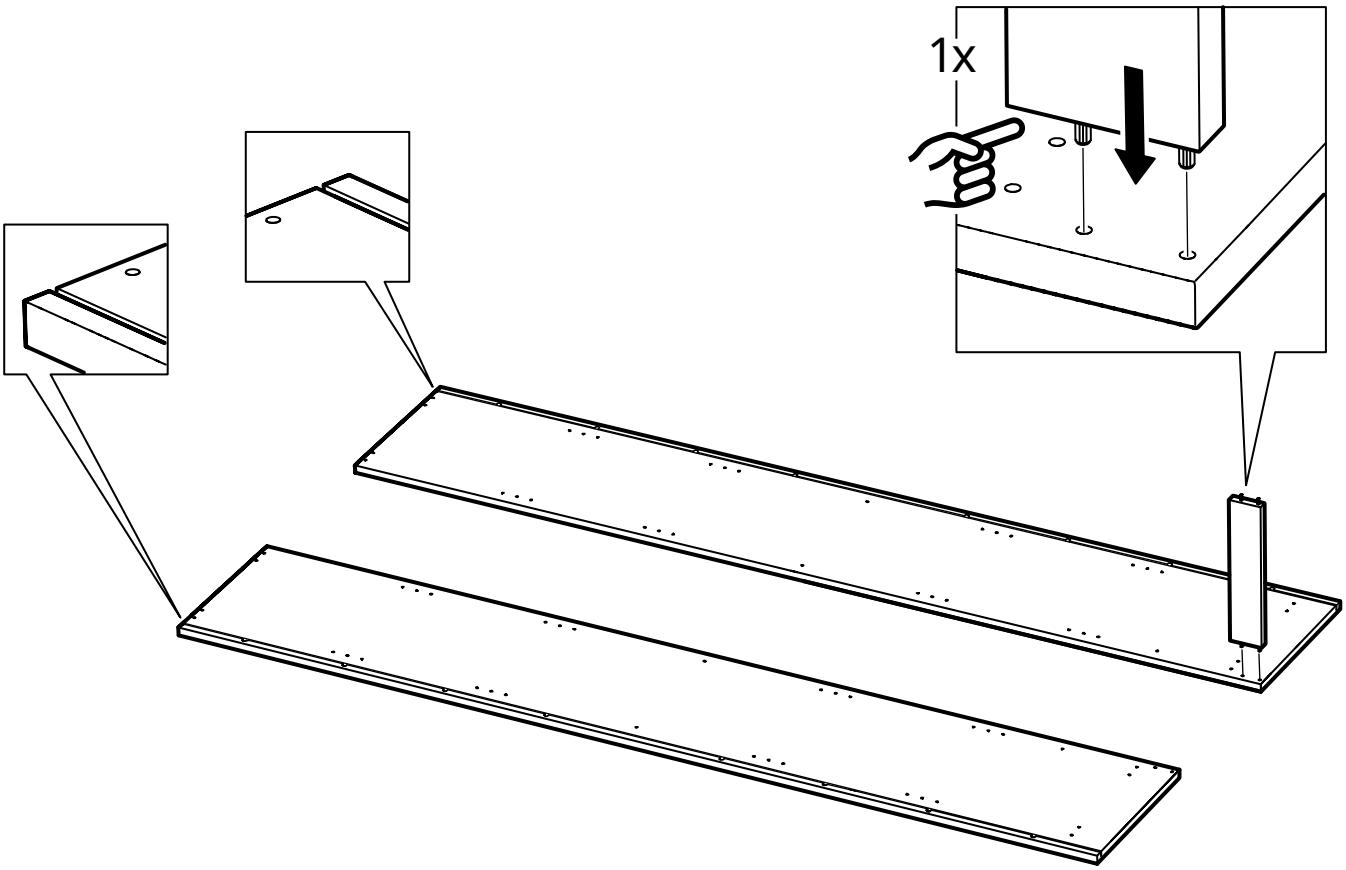

6

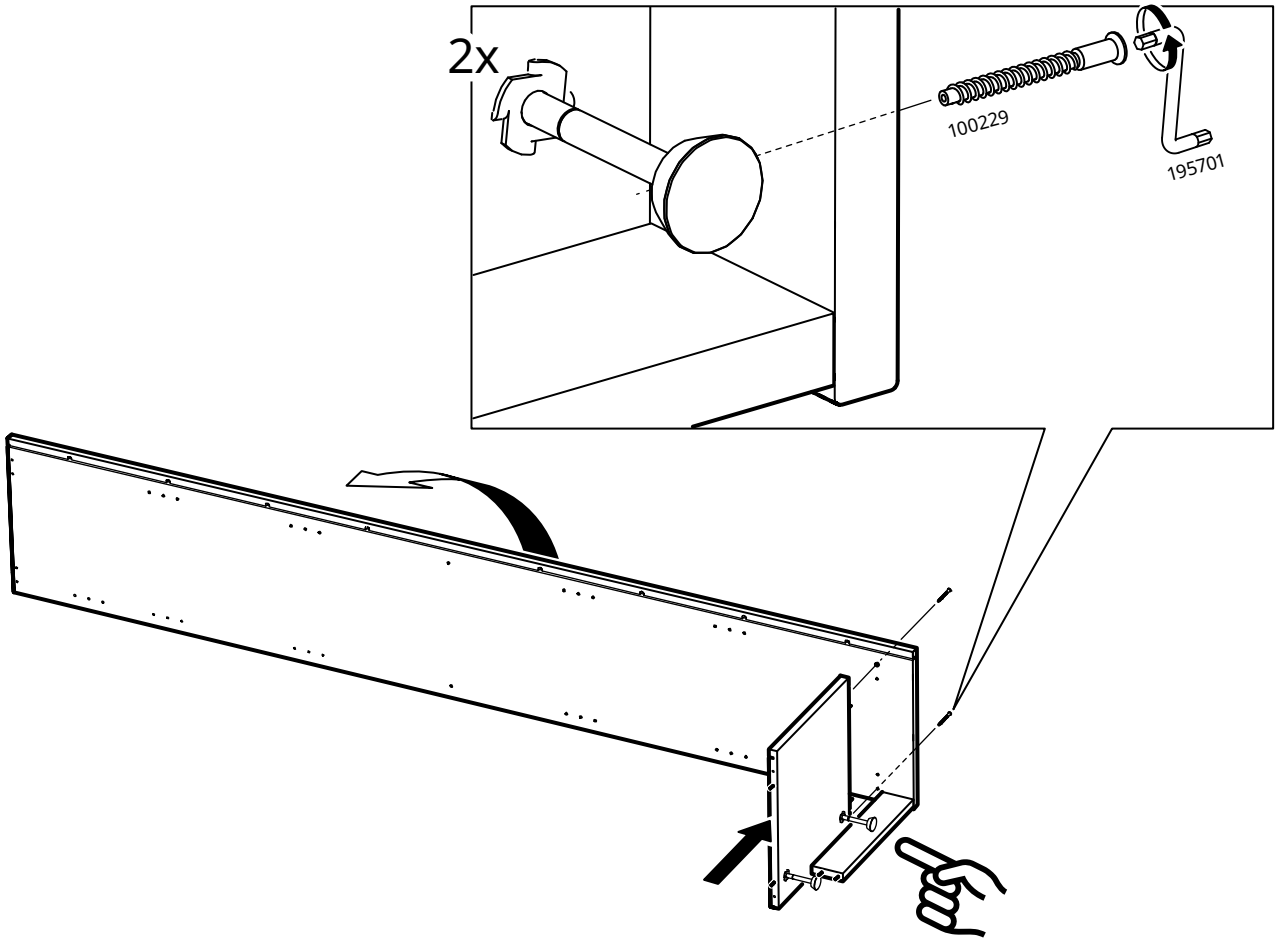

7

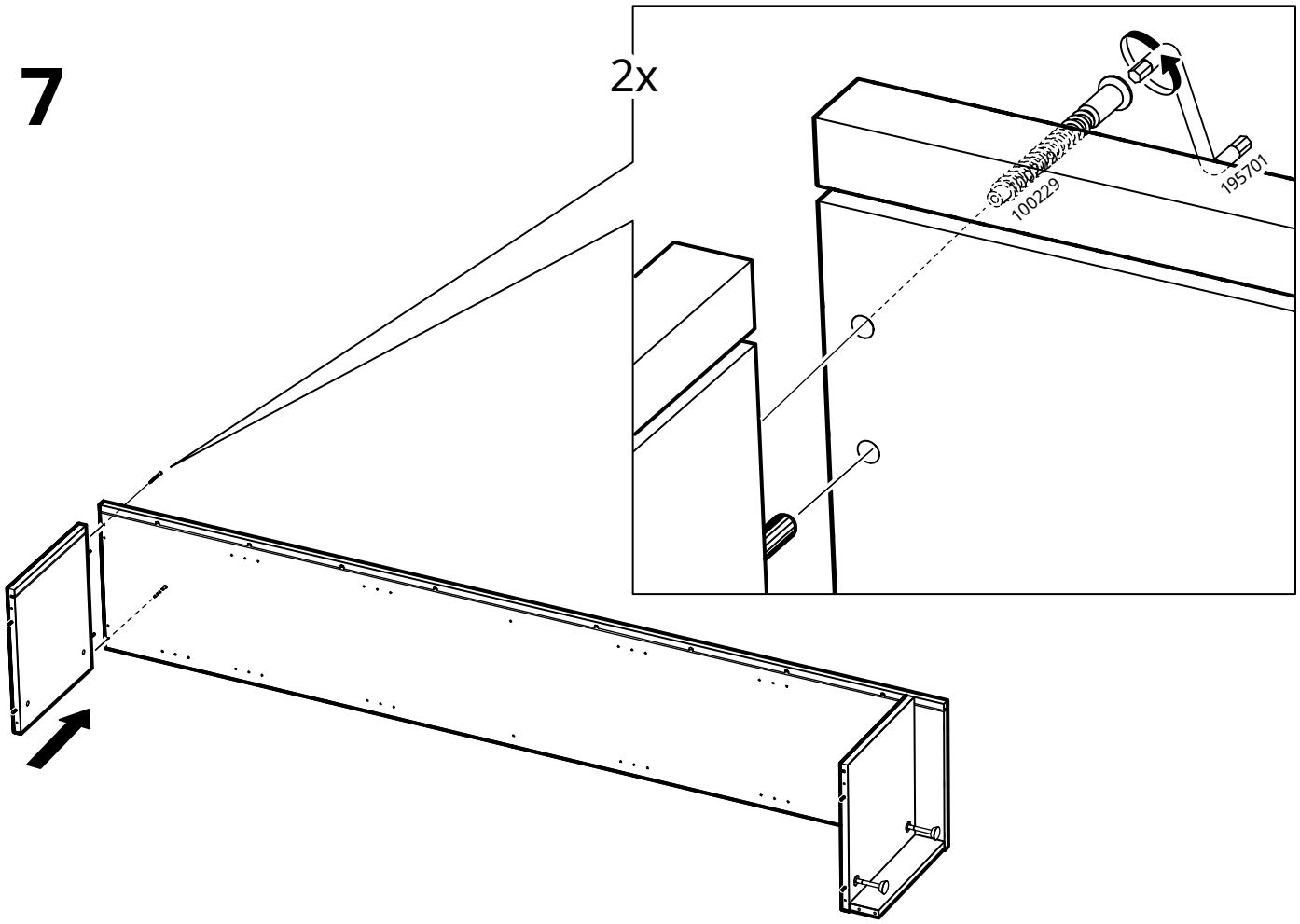

8

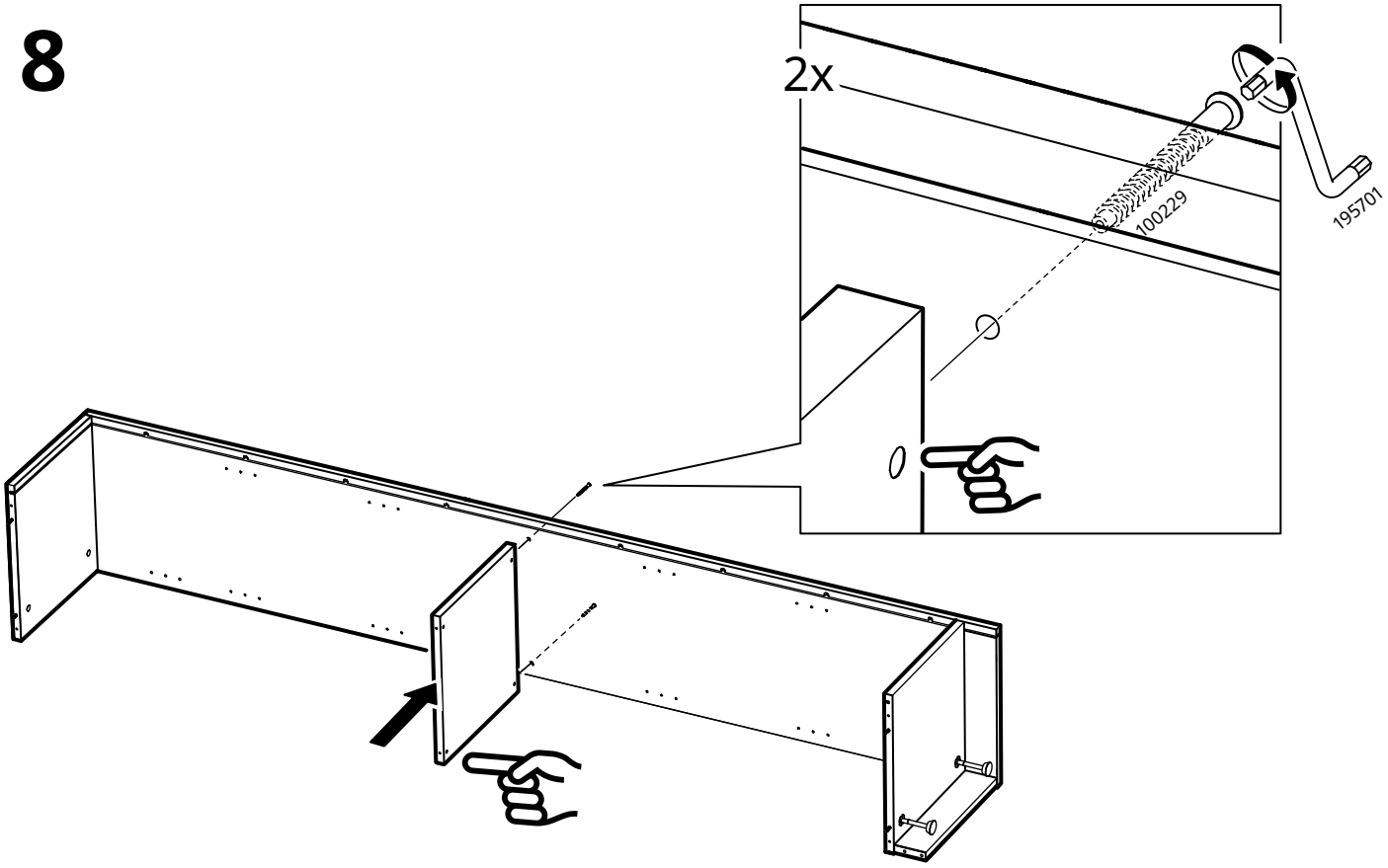

9

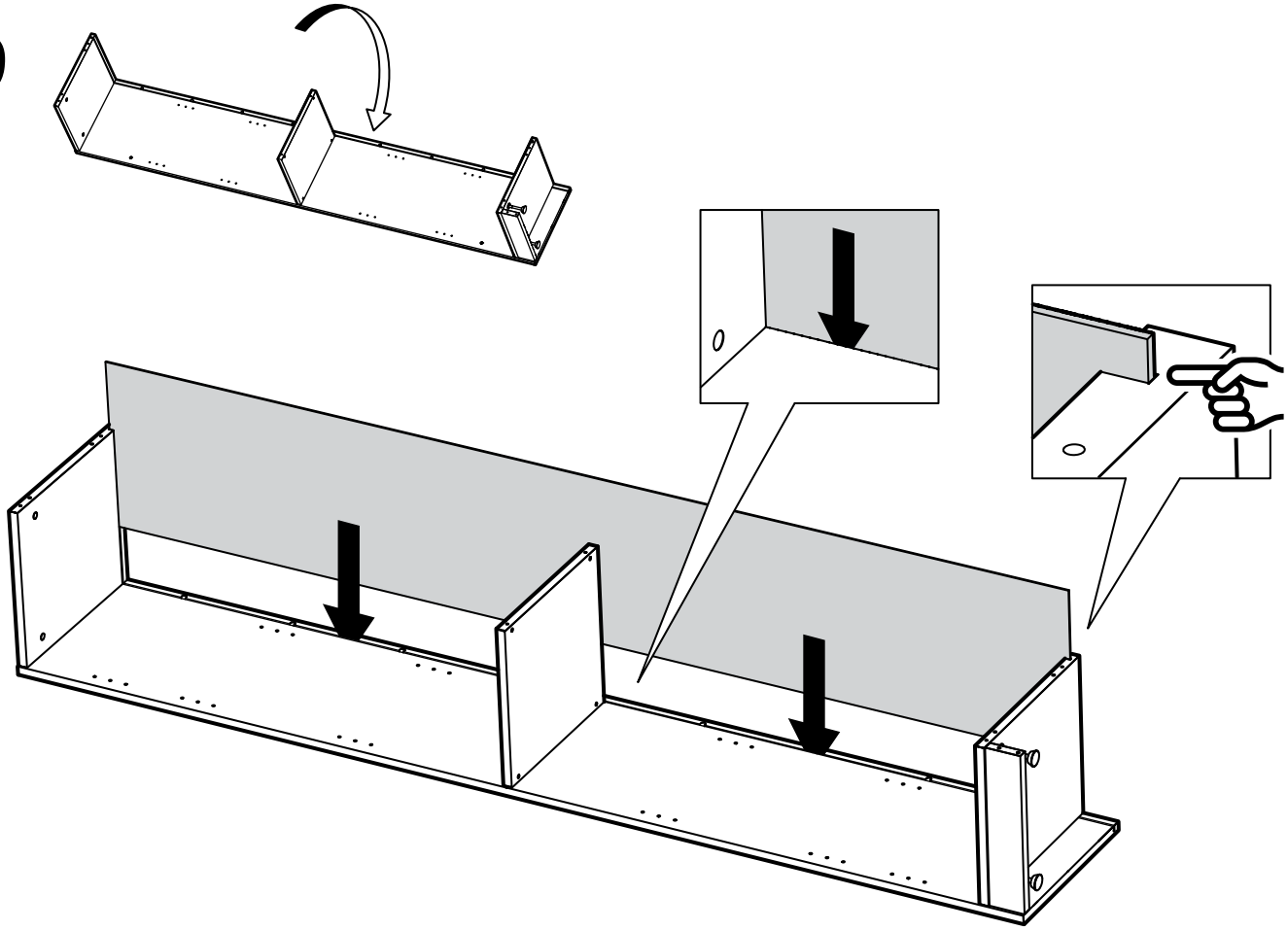

10

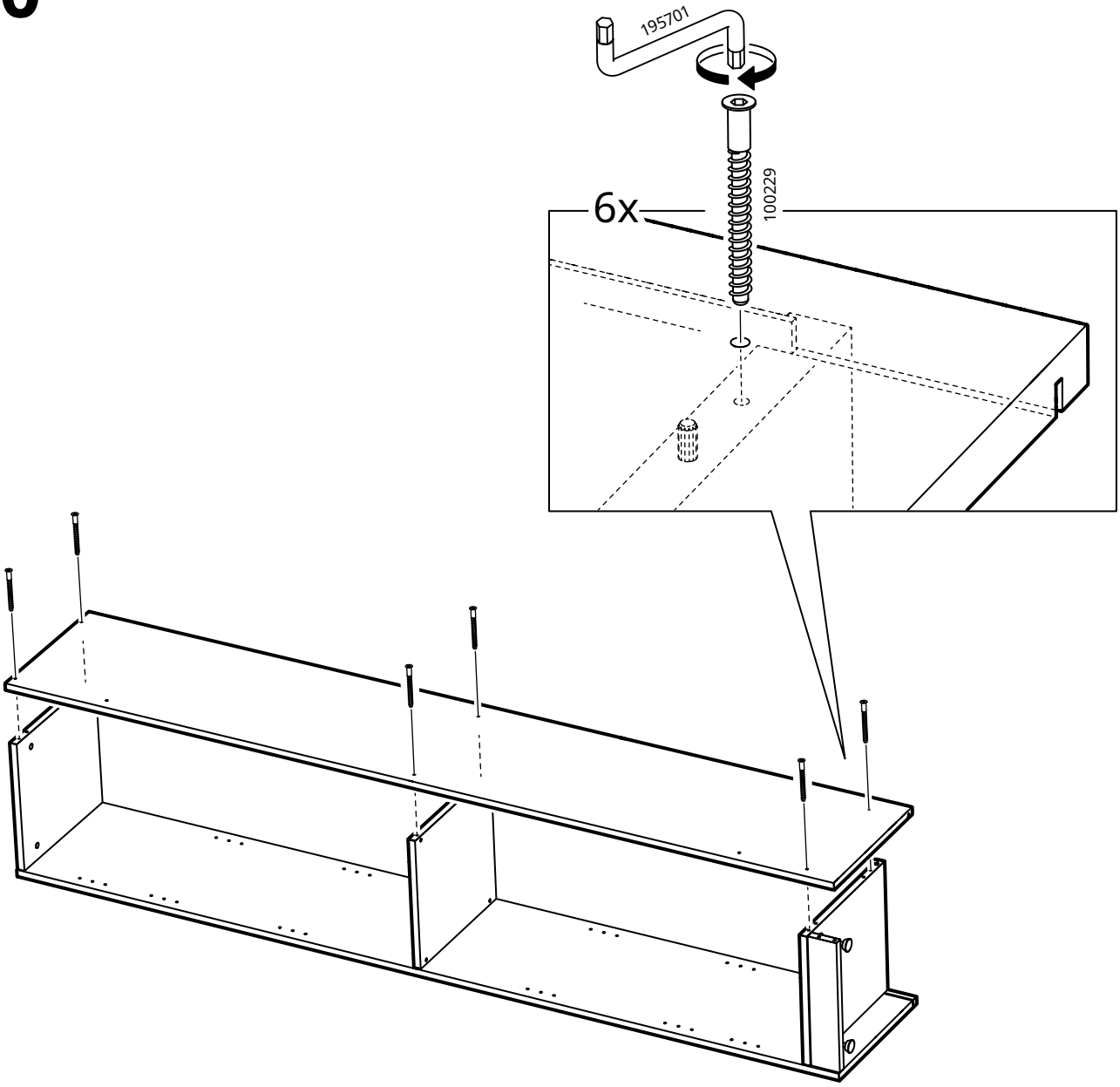

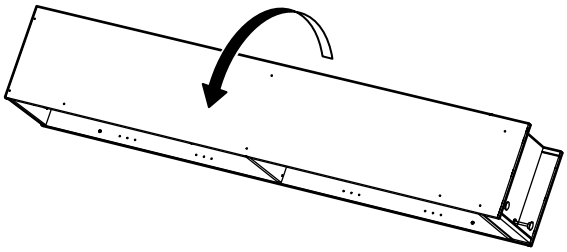

11

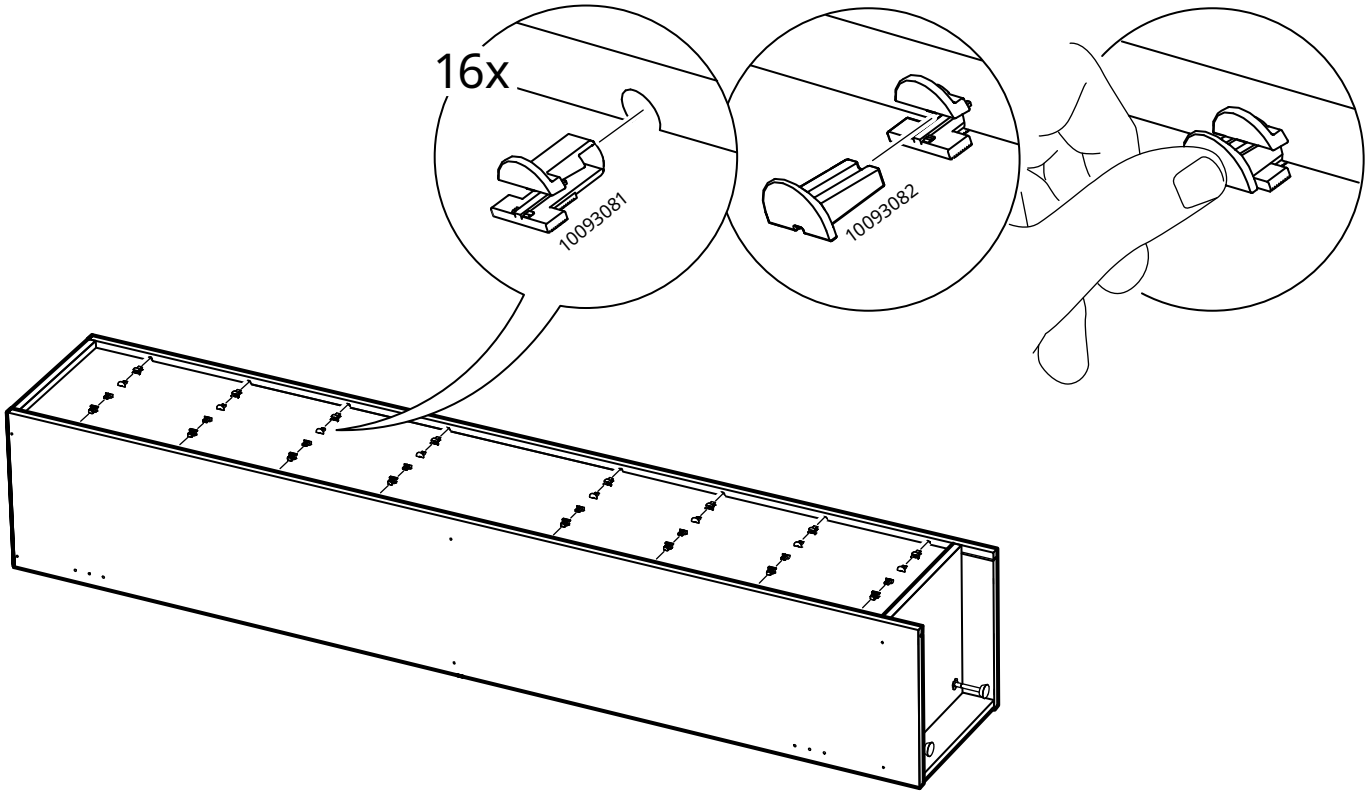

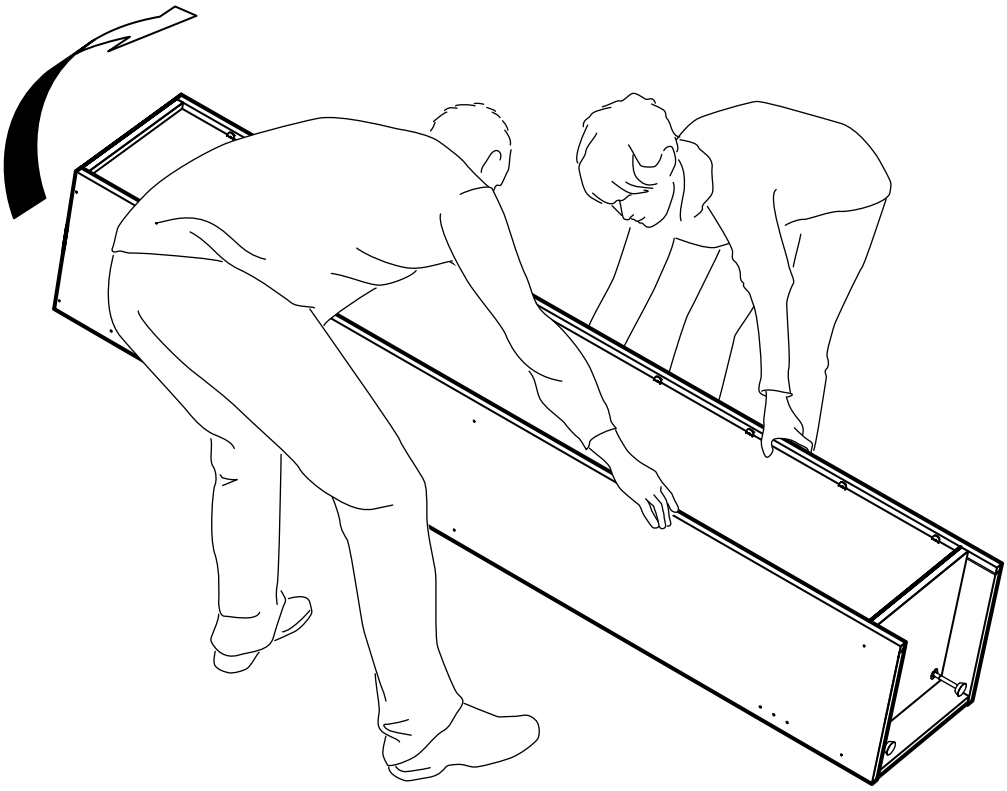

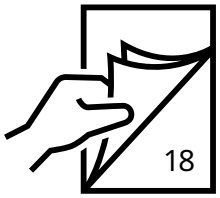

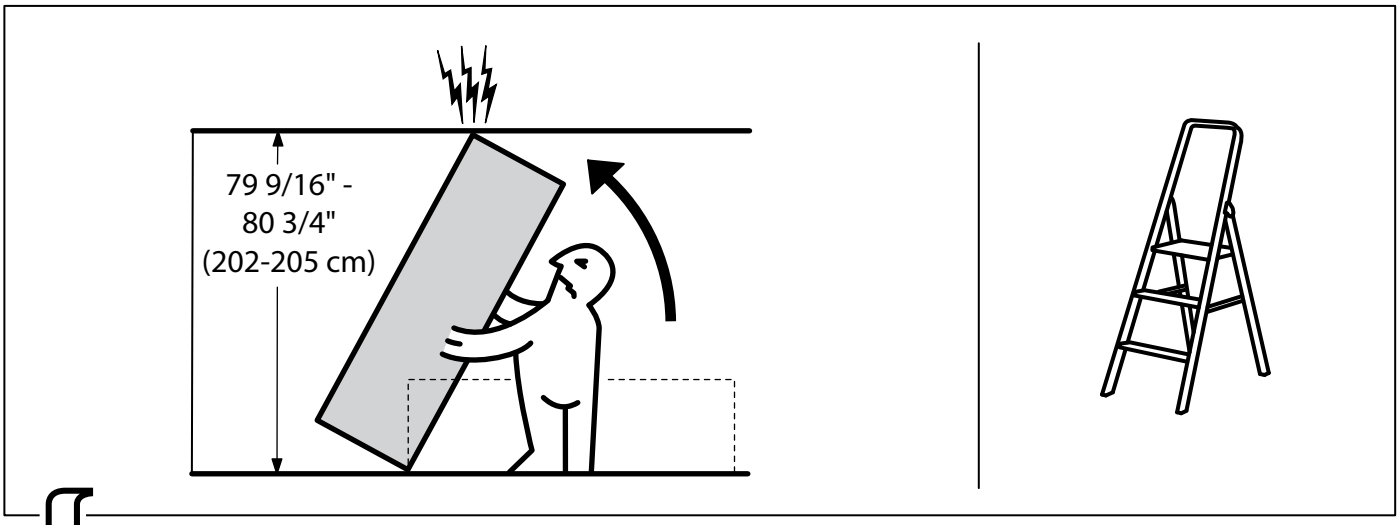

1

2

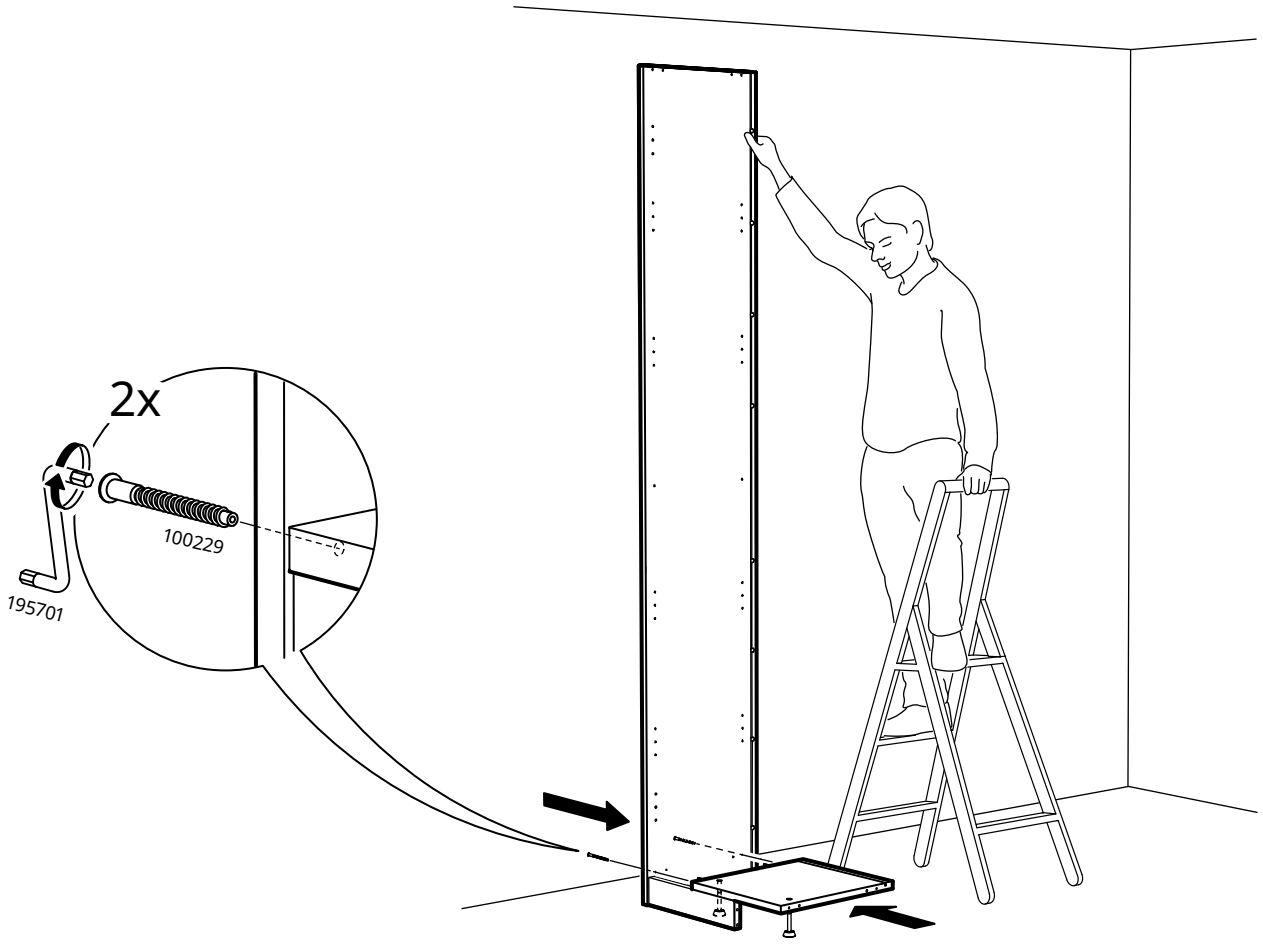

3

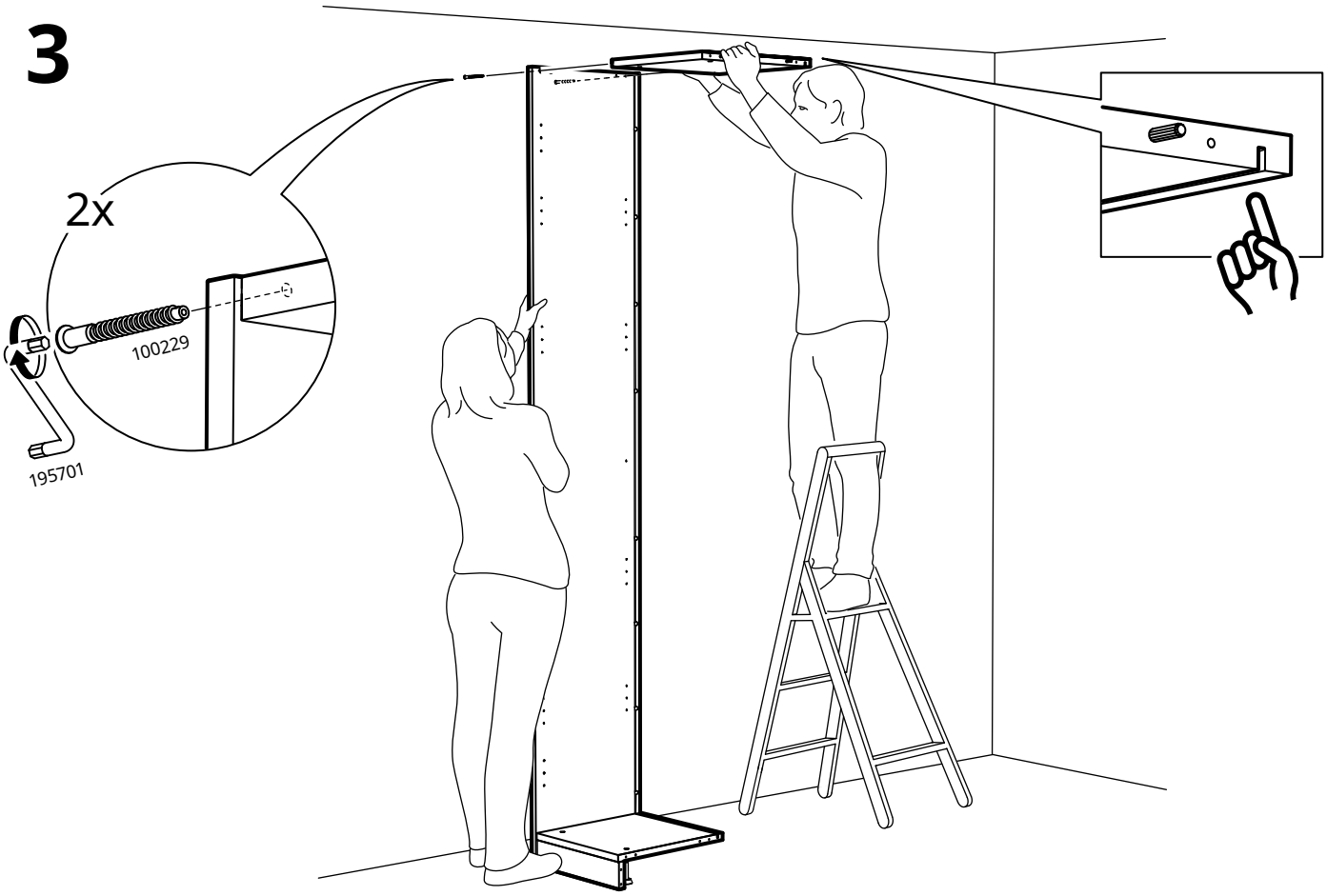

4

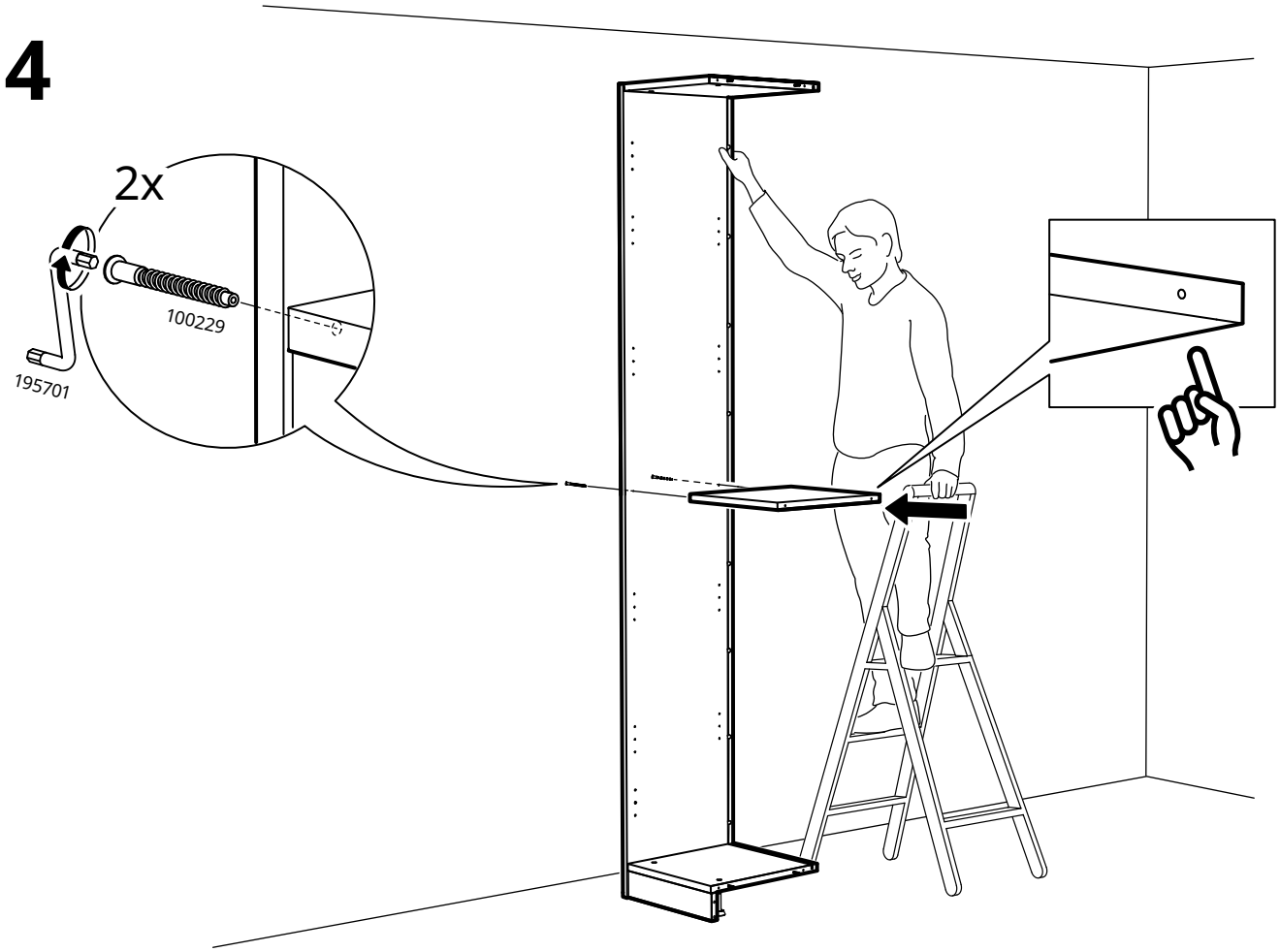

5

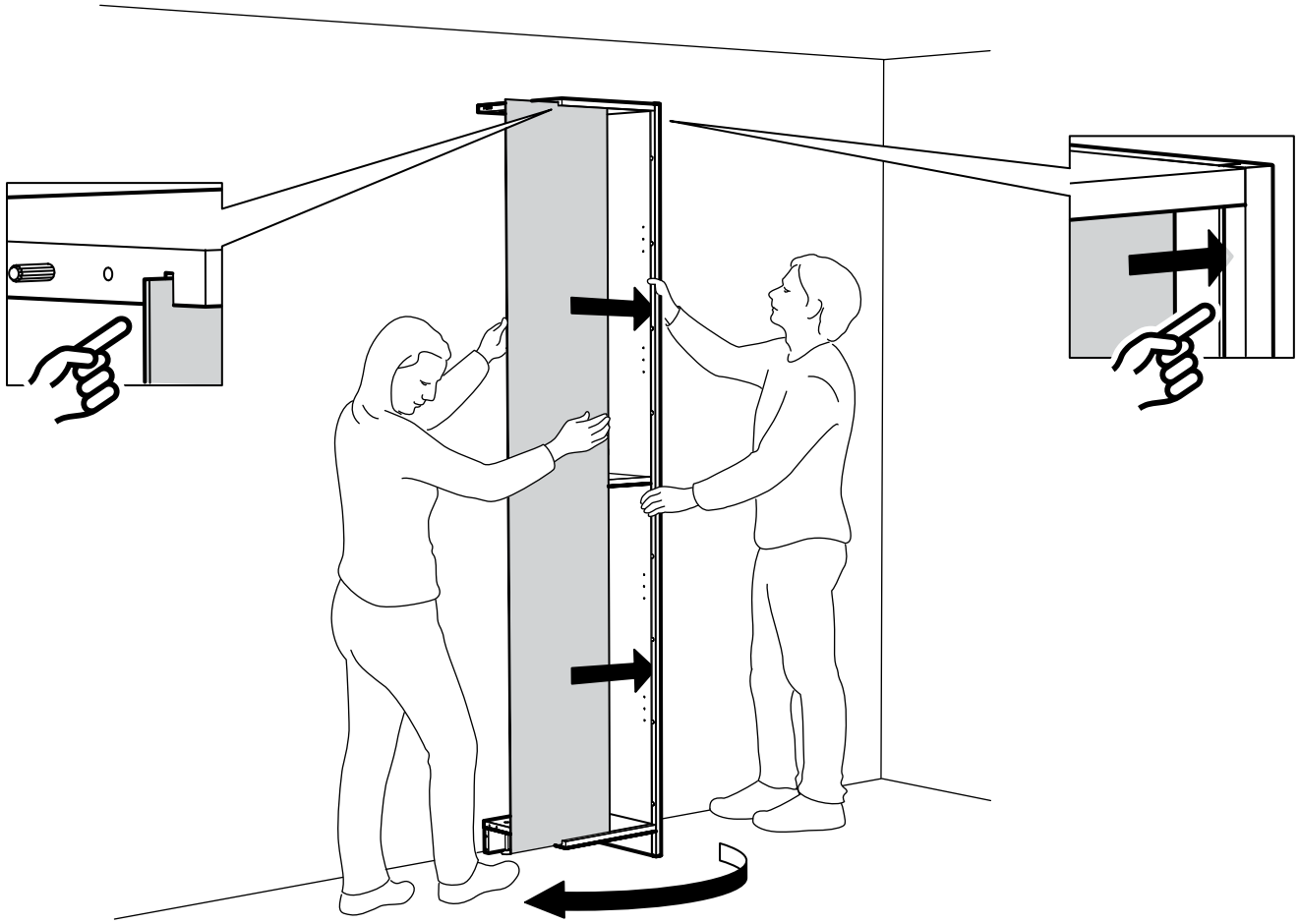

6

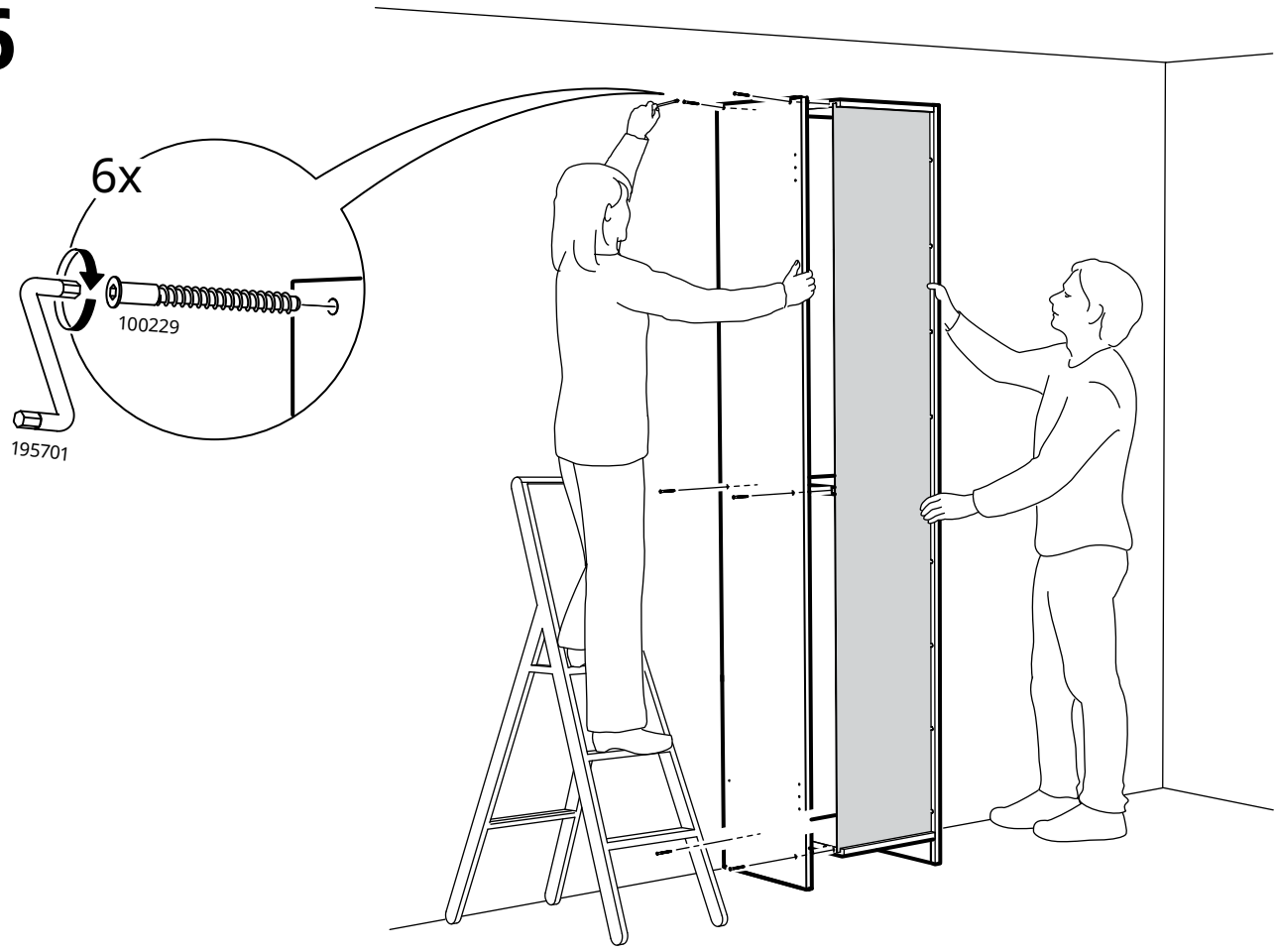

7

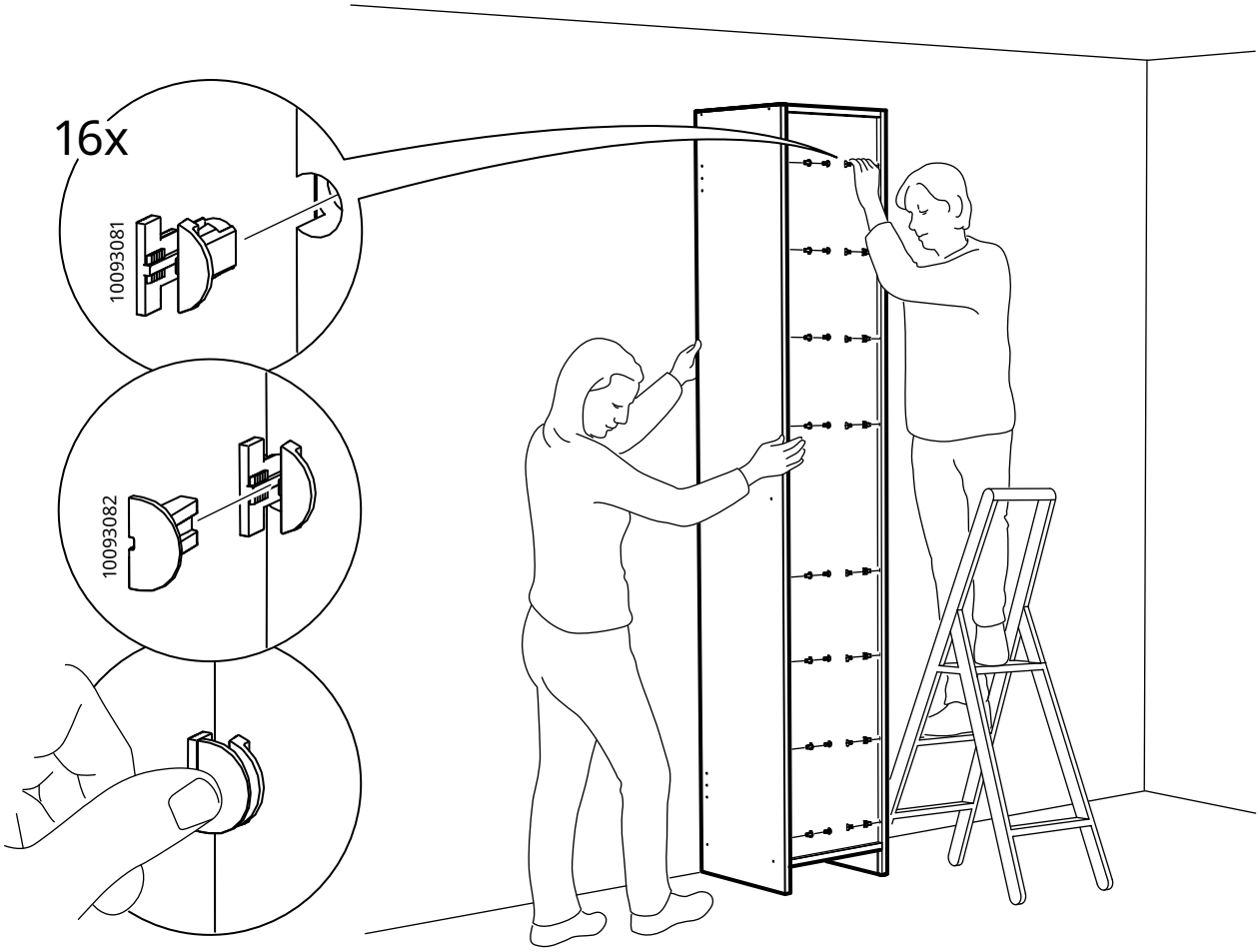

8

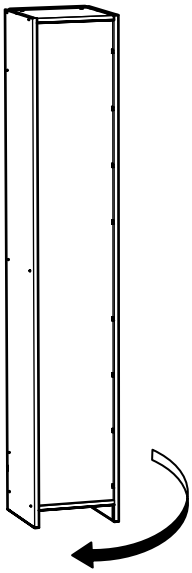

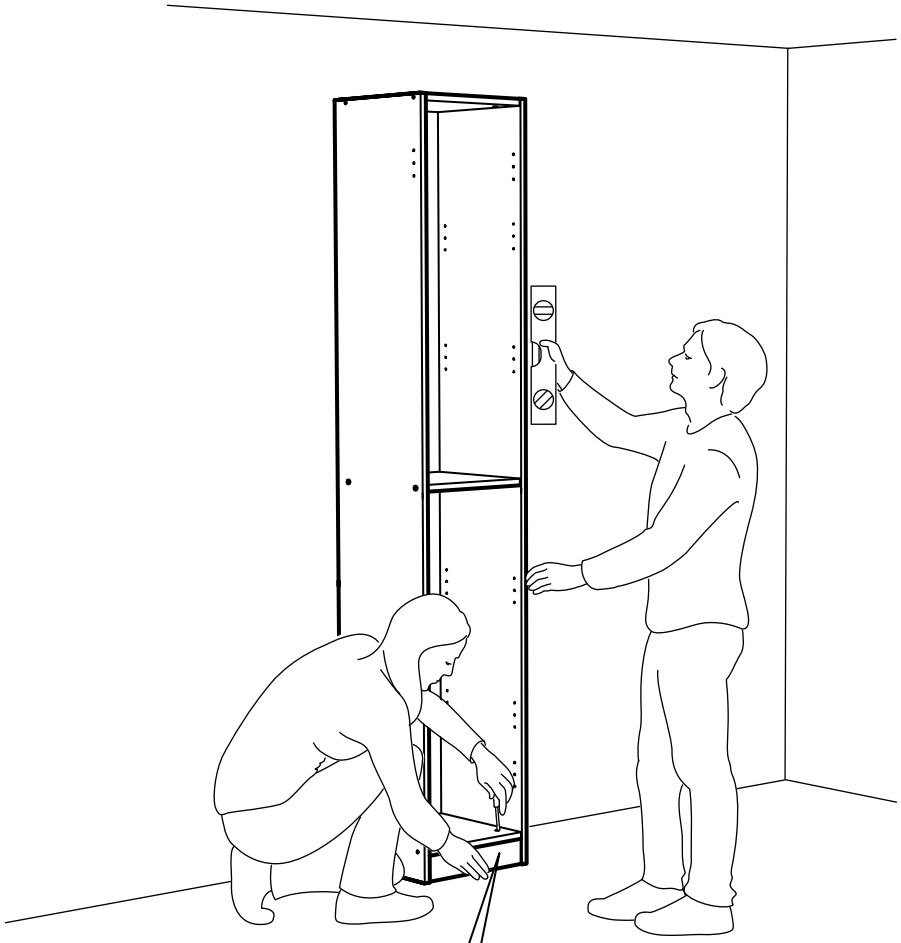

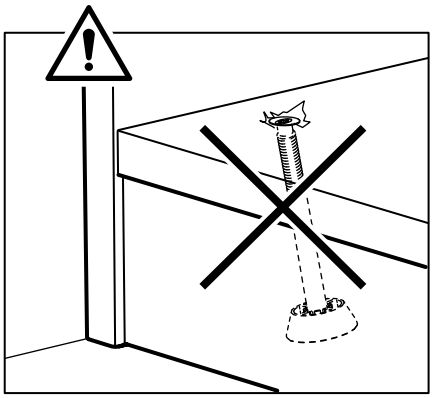

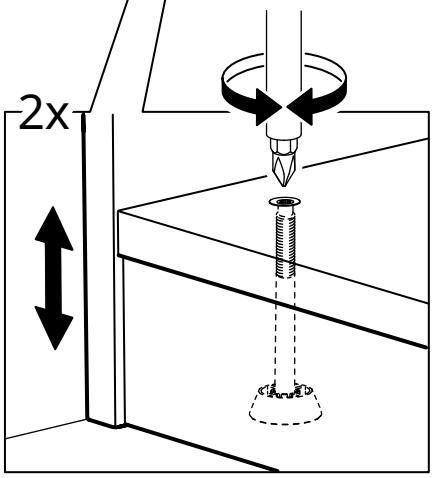

9

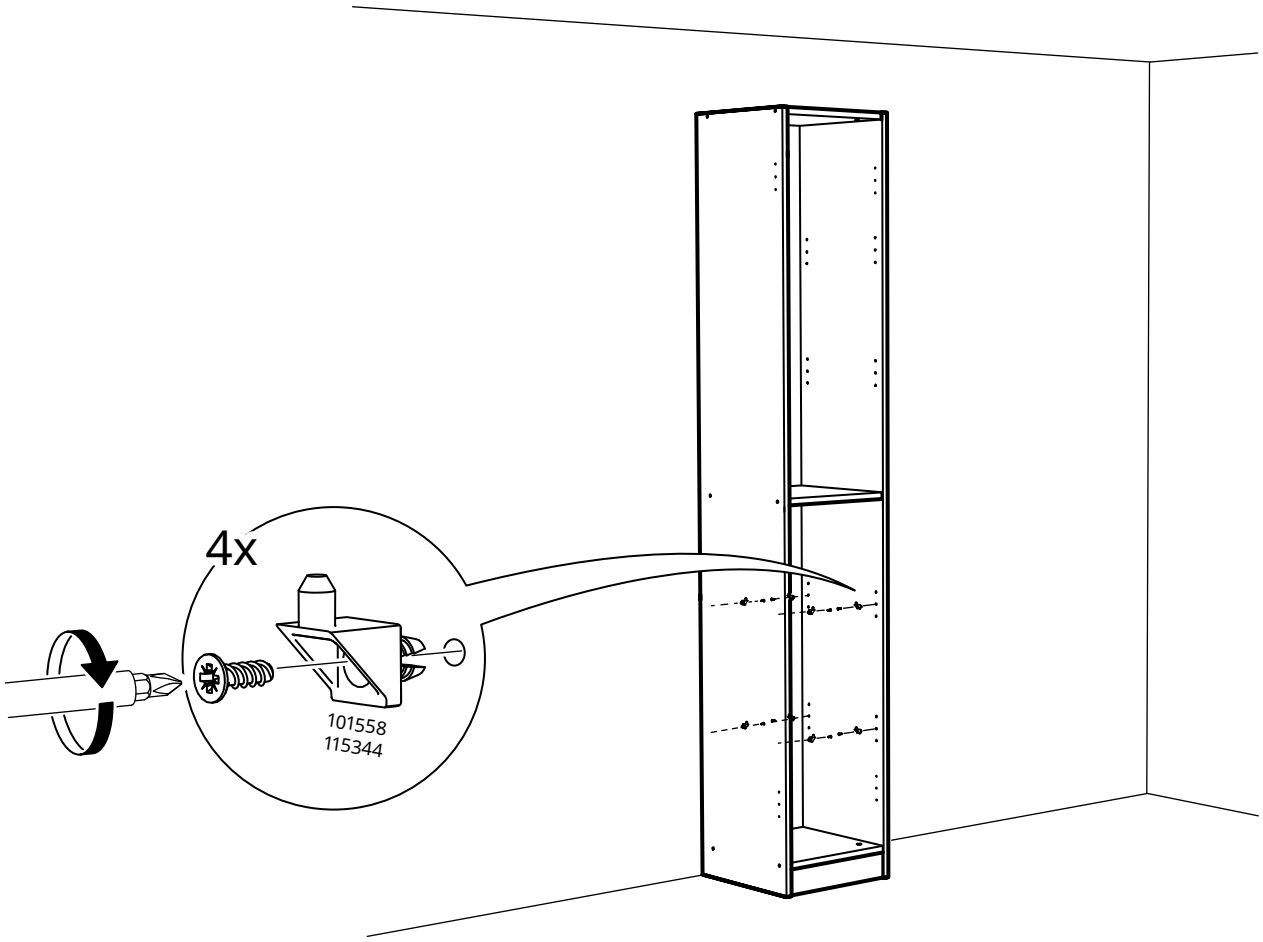

10

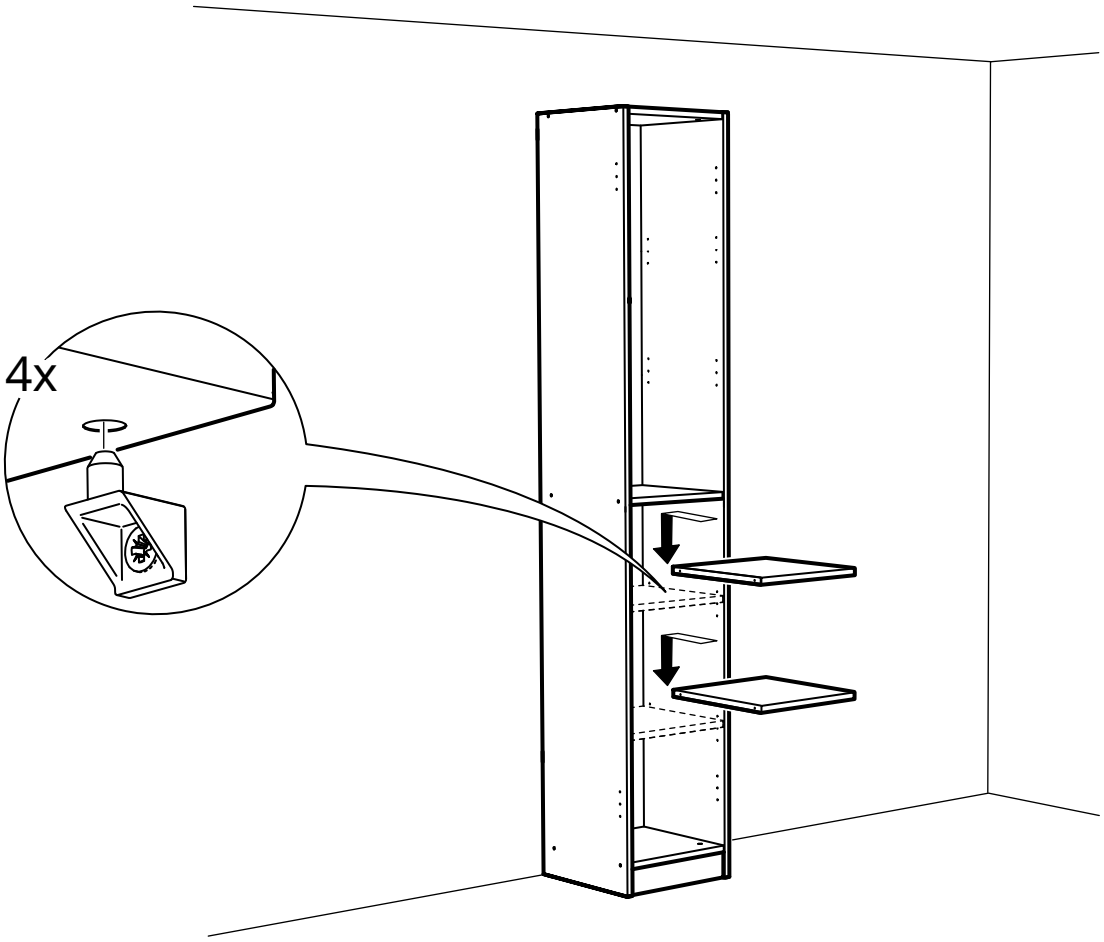

11

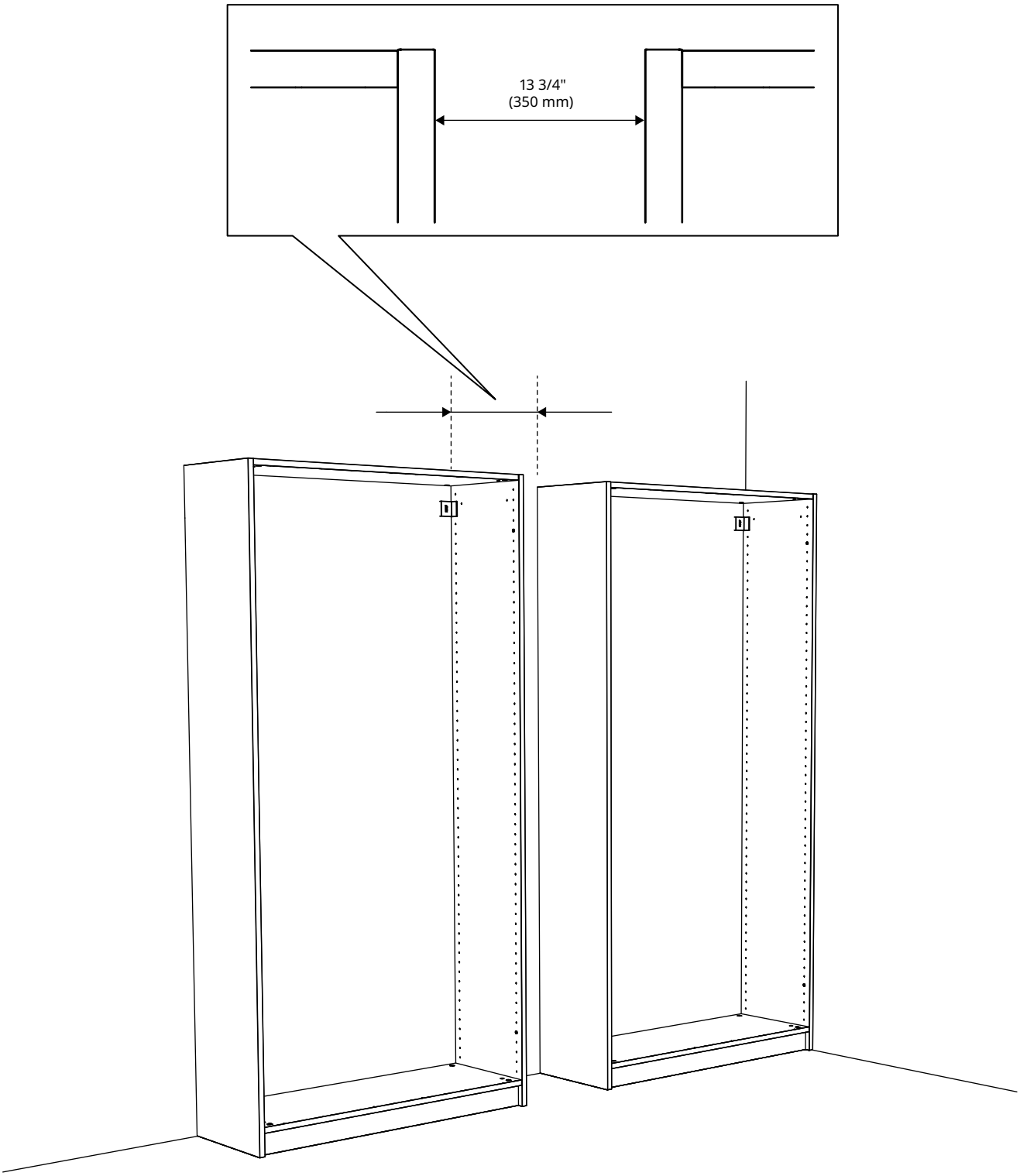

12

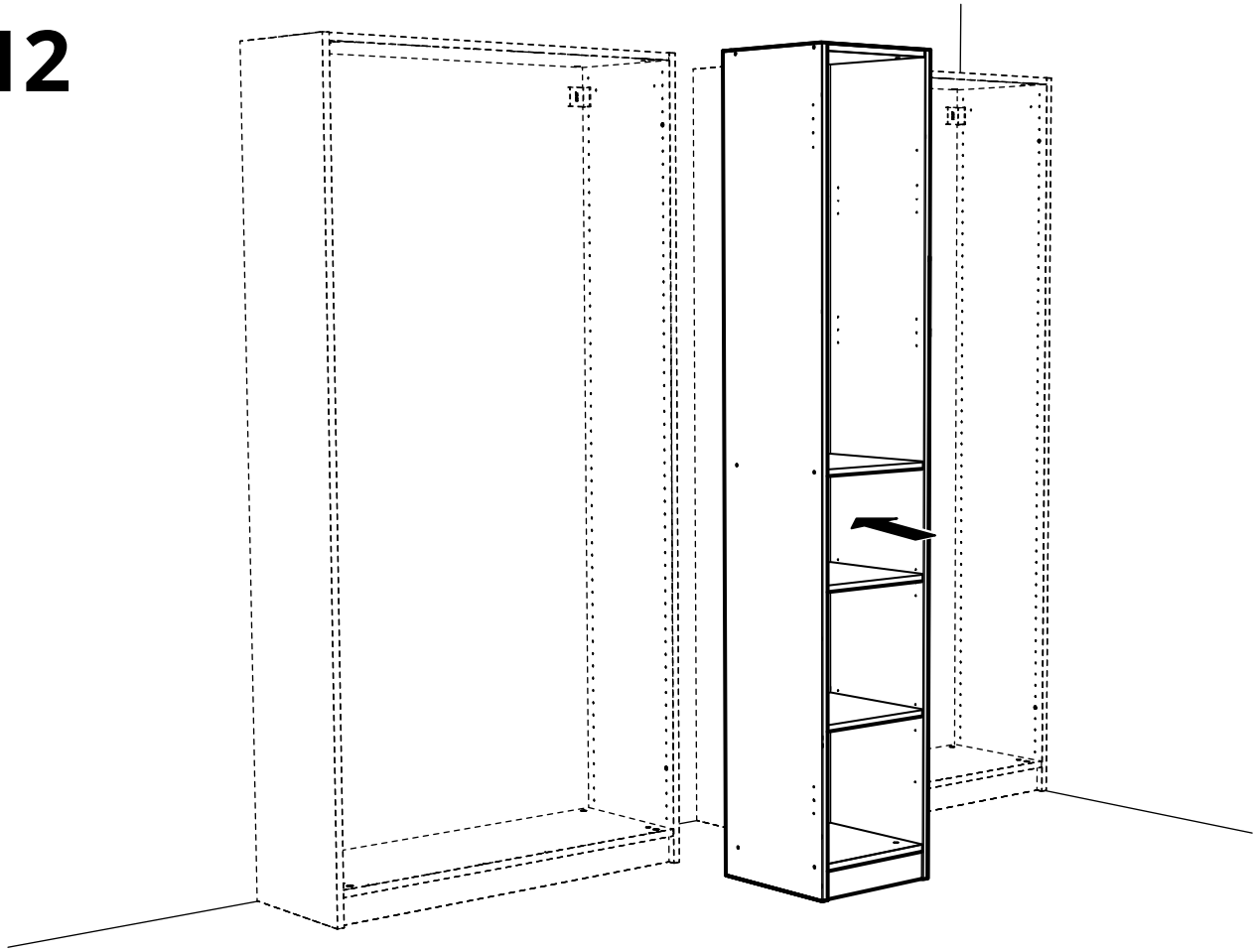

13

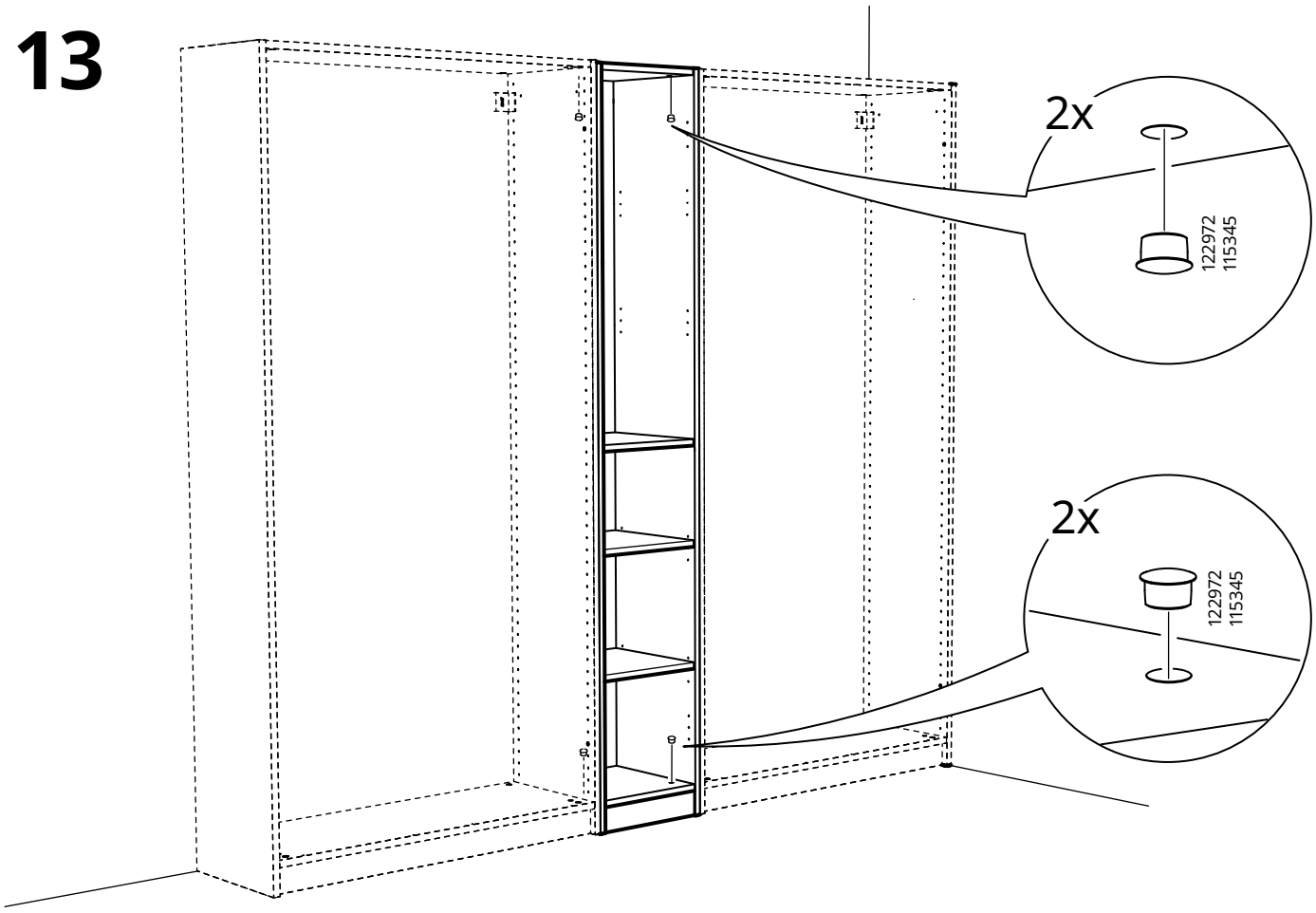

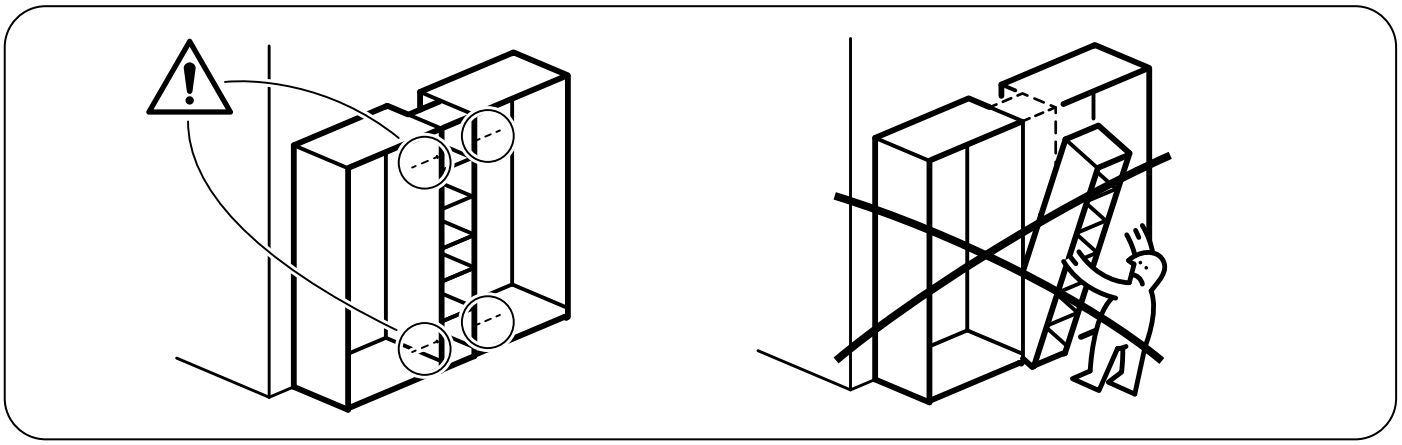

14

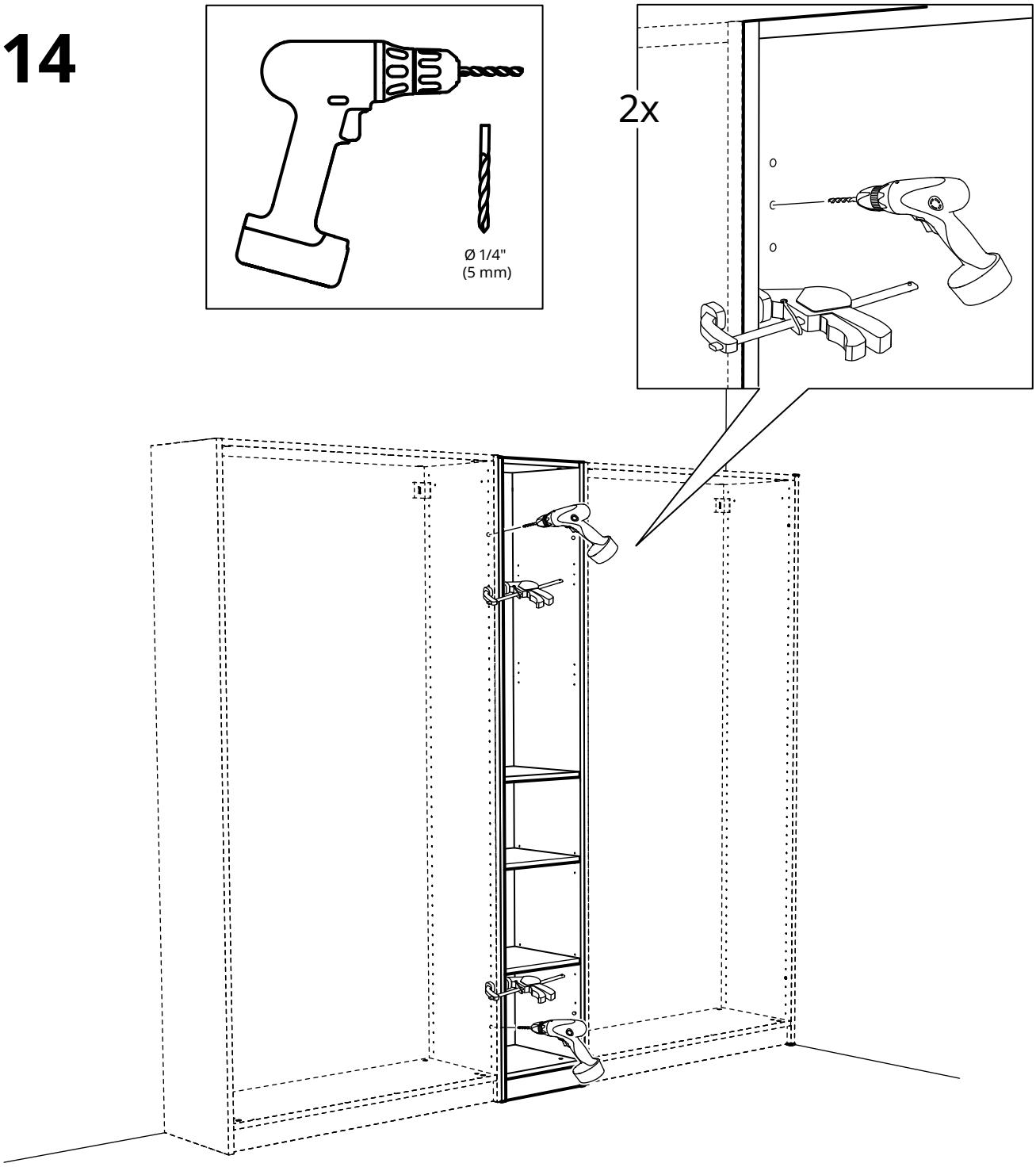

15

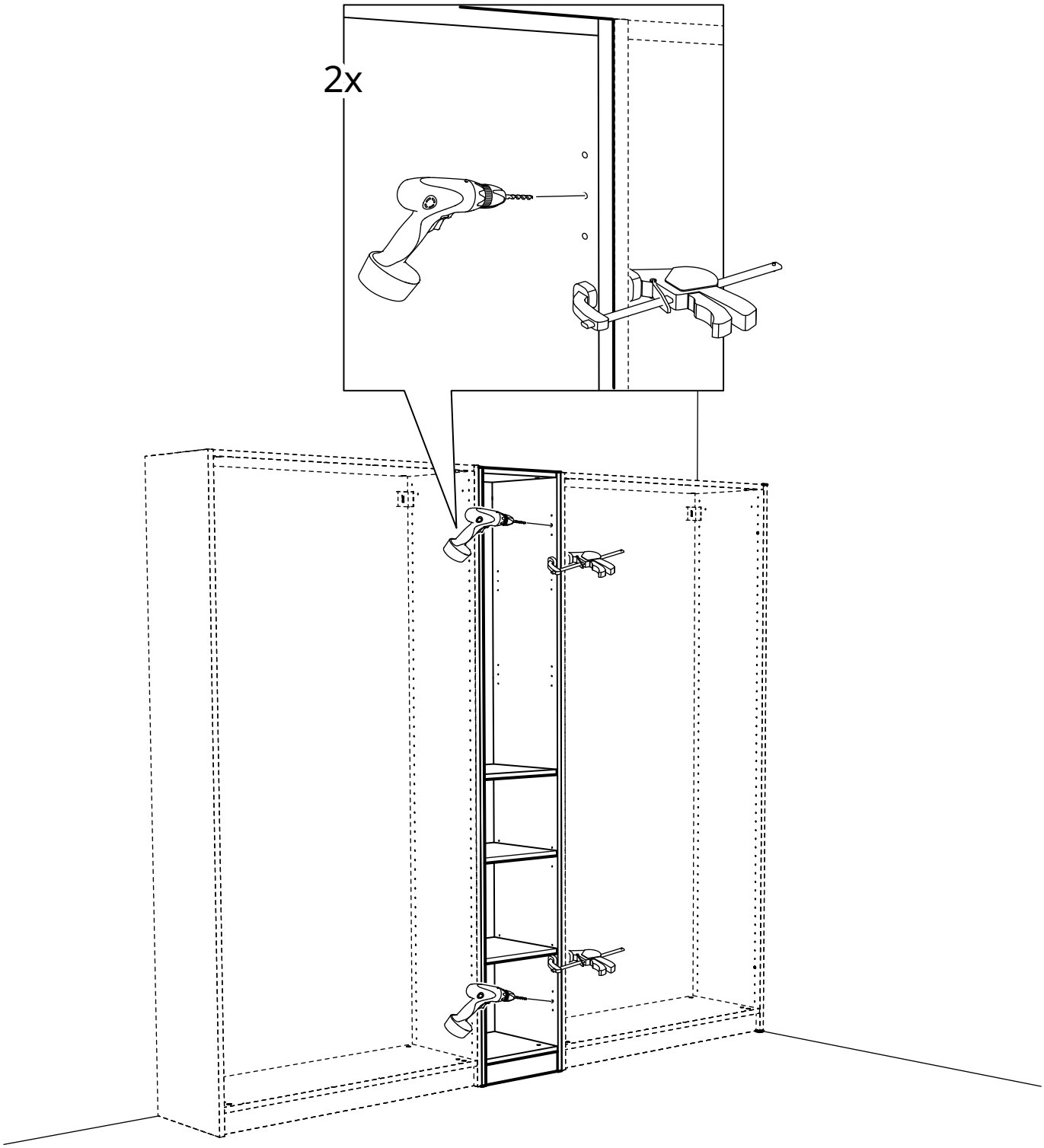

16

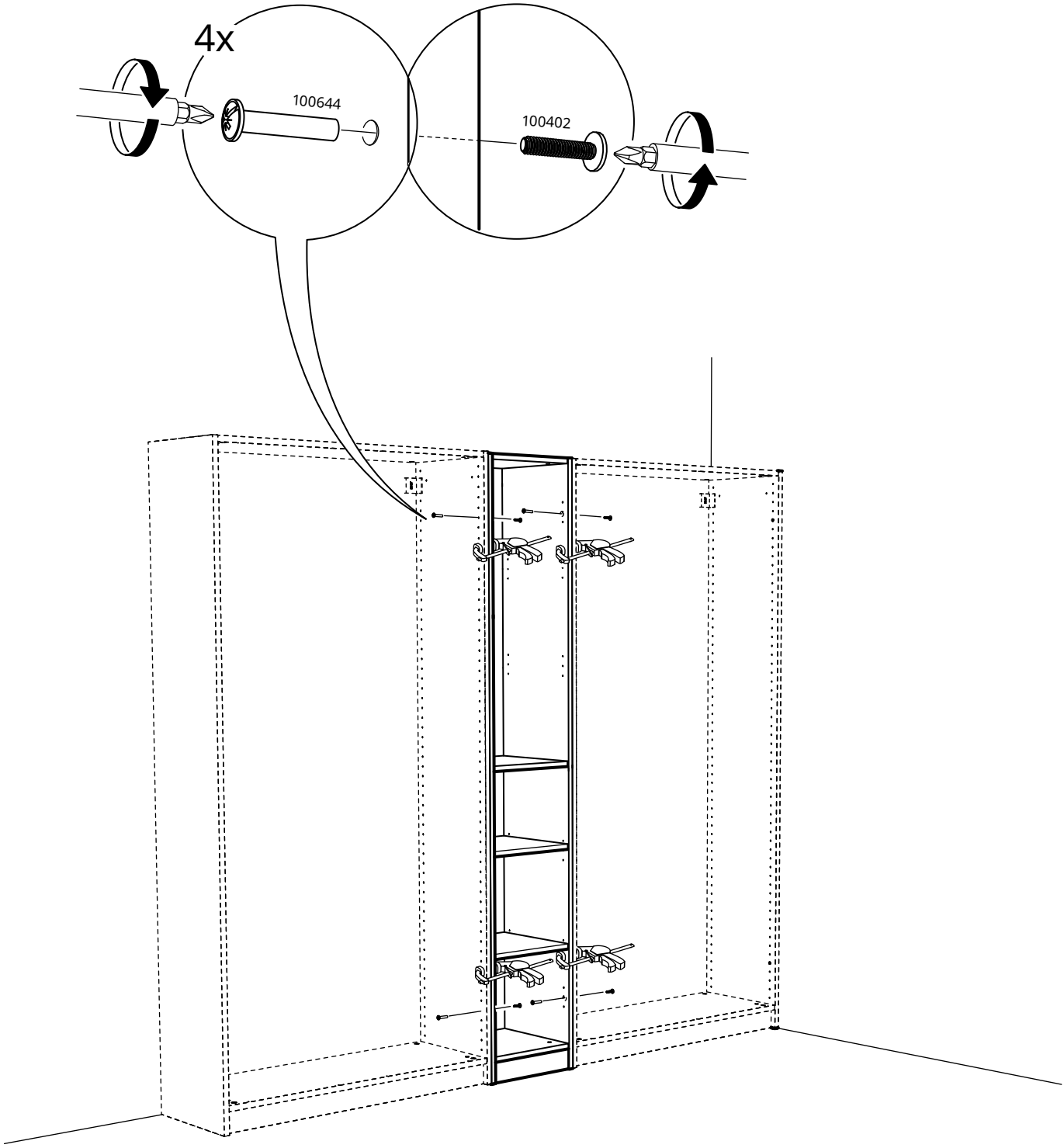

29

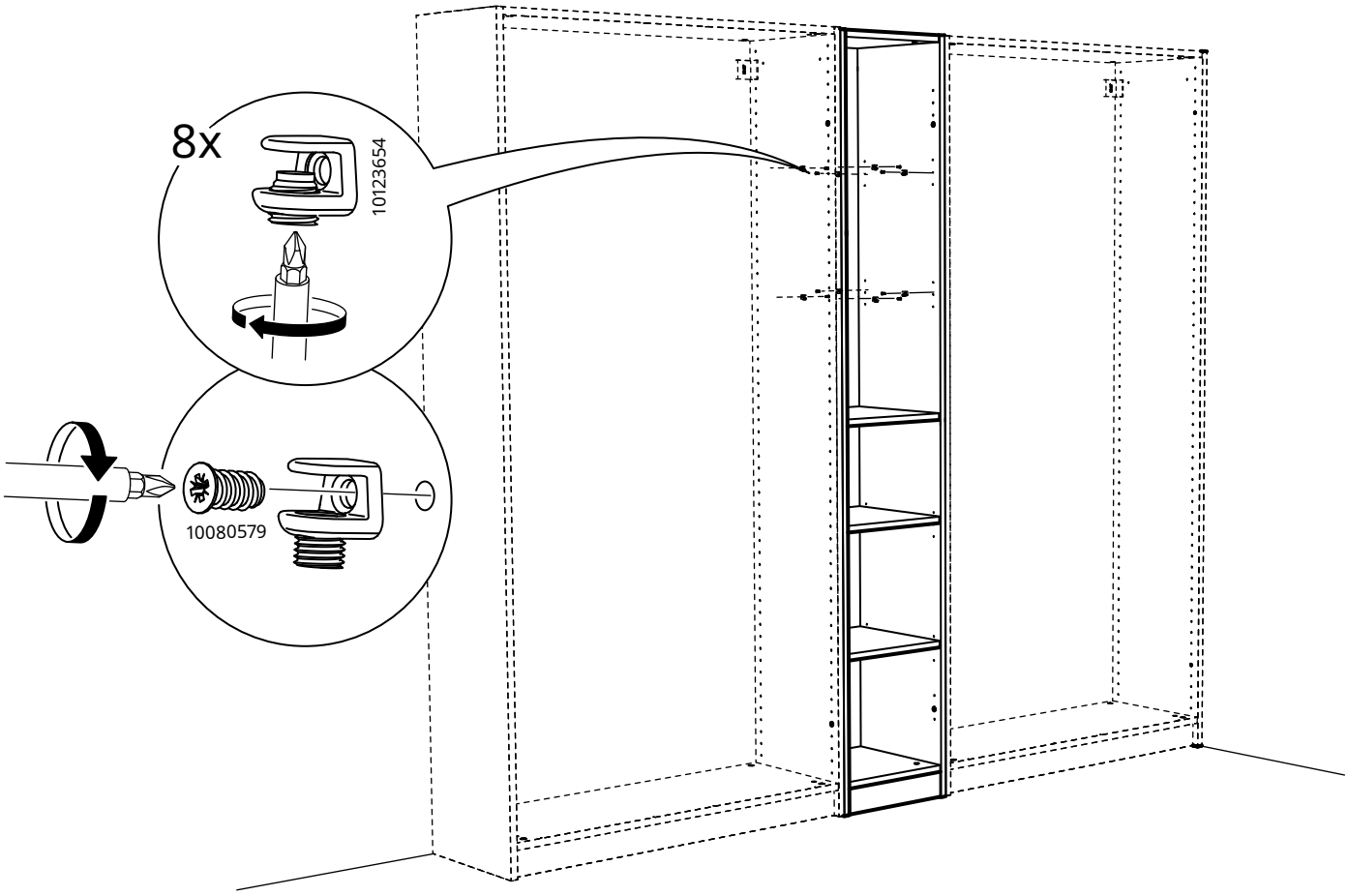

30

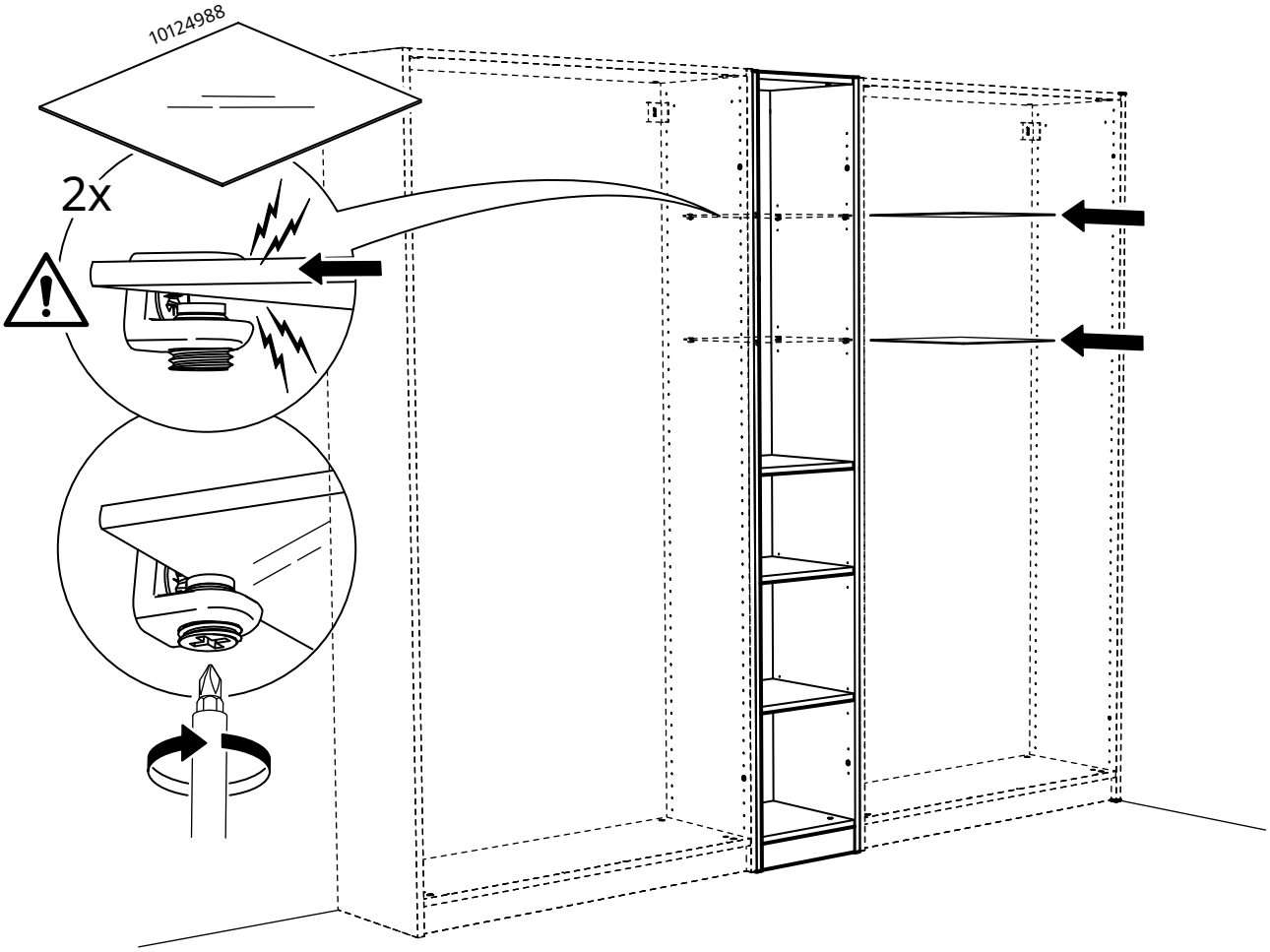

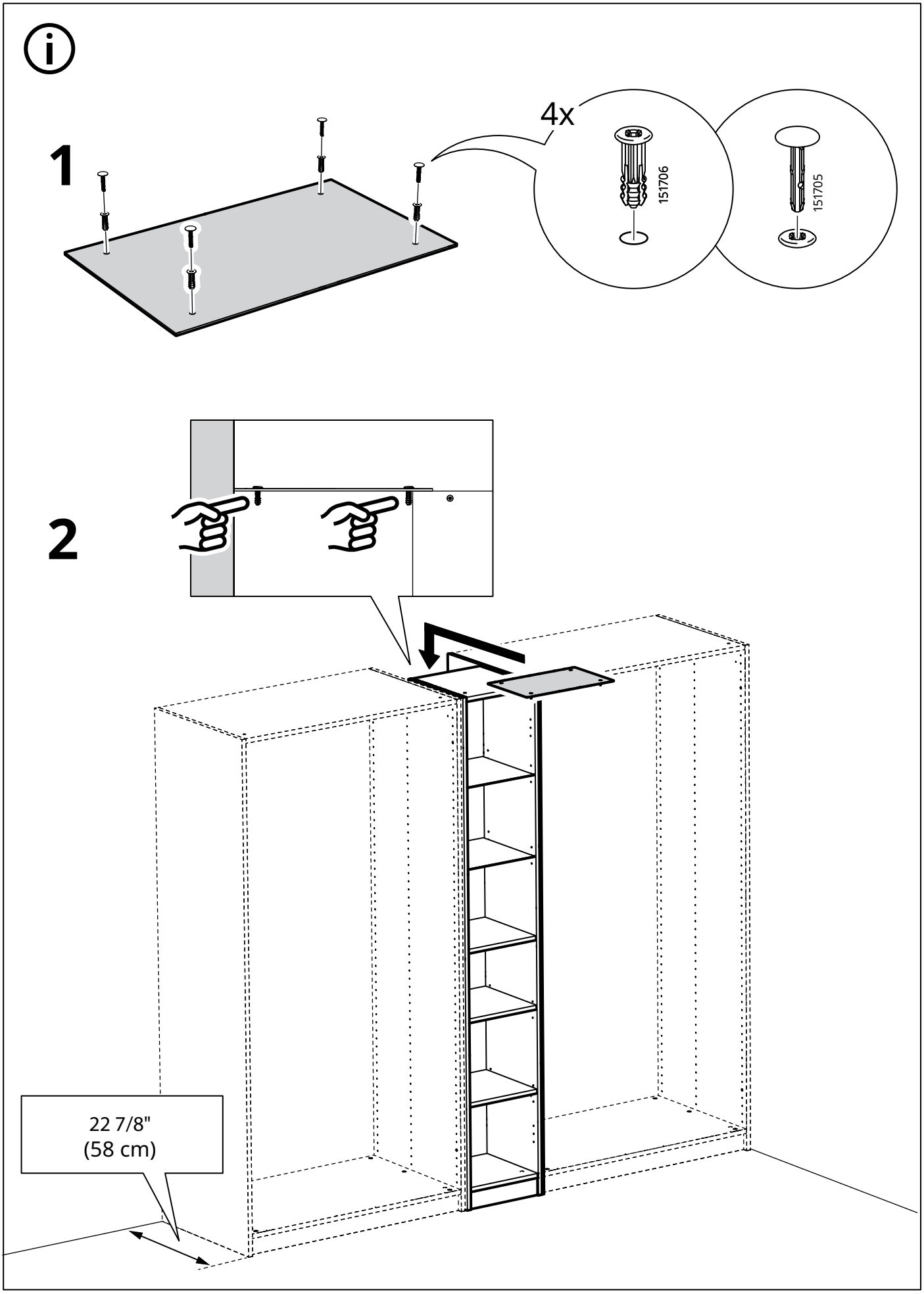
1
4x
151706
151705
2
22 7/8"
(58 cm)

© Inter IKEA Systems B.V. 2025